FURUNO

INSTALLATION MANUAL

COLOR SCANNING SONAR

MODEL CSH-21/21K/21F/22/22F

FURUNO ELECTRIC CO., LTD.
NISHINOMIYA, JAPAN

©FURUNO ELECTRIC CO., LTD.

9-52, Ashihara-cho,
Nishinomiya, Japan 662

Telephone: 0798-65-2111
Telefax: 0798-65-4200

·Your Local Agent/Dealer

All rights reserved. Printed in Japan

FIRST EDITION : DEC 1992
D : SEP. 29, 1997

PUB. No. IME-12860-D
(TATA) CSH-21/22 SER.

00080443600

⚠ SAFETY INSTRUCTIONS

"**DANGER**", "**WARNING**" and "**CAUTION**" notices appear throughout this manual. It is the responsibility of the installer of the equipment to read, understand and follow these notices. If you have any questions regarding these safety instructions, please contact a FURUNO agent or dealer.

⚠ DANGER	This notice indicates a potentially hazardous situation which, if not avoided, will result in death or serious injury.
⚠ WARNING	This notice indicates a potentially hazardous situation which, if not avoided, could result in death or serious injury.
⚠ CAUTION	This notice indicates a potentially hazardous situation which, if not avoided, could result in minor or moderate injury, or property damage.

⚠ WARNING

Only qualified personnel should work inside the equipment.

This equipment uses high voltage electricity which can shock, burn, or cause death.

Turn off the power at the ship's mains switchboard before beginning the installation. Post a warning sign near the switchboard to ensure that the power will not be applied while the equipment is being installed.

Serious injury or death can result if the power is not turned off, or is applied while the equipment is being installed.

⚠ CAUTION

Ground the equipment.

Ungrounded equipment can give off or receive electromagnetic interference or cause electrical shock.

Confirm that the power supply voltage is compatible with the voltage rating of the equipment.

Connection to the wrong power supply can cause fire or equipment damage. The voltage rating appears on the label at the rear of the equipment.

Do not exceed speed noted in the specifications when operating the equipment or during lowering or raising of the transducer.

The transducer may become damaged.

The zinc block attached to the transducer must be replaced yearly.

The junction between the transducer and main shaft may corrode, which can result in loss of the tansducer or water leakage inside the ship.

GENERAL REMARKS FOR INSTALLATION

1. When placing the CPU box assembly and the TCB/TAMP board into the transmitter unit main body, slide them along the guide slots, otherwise the connector pins in the back will be damaged.

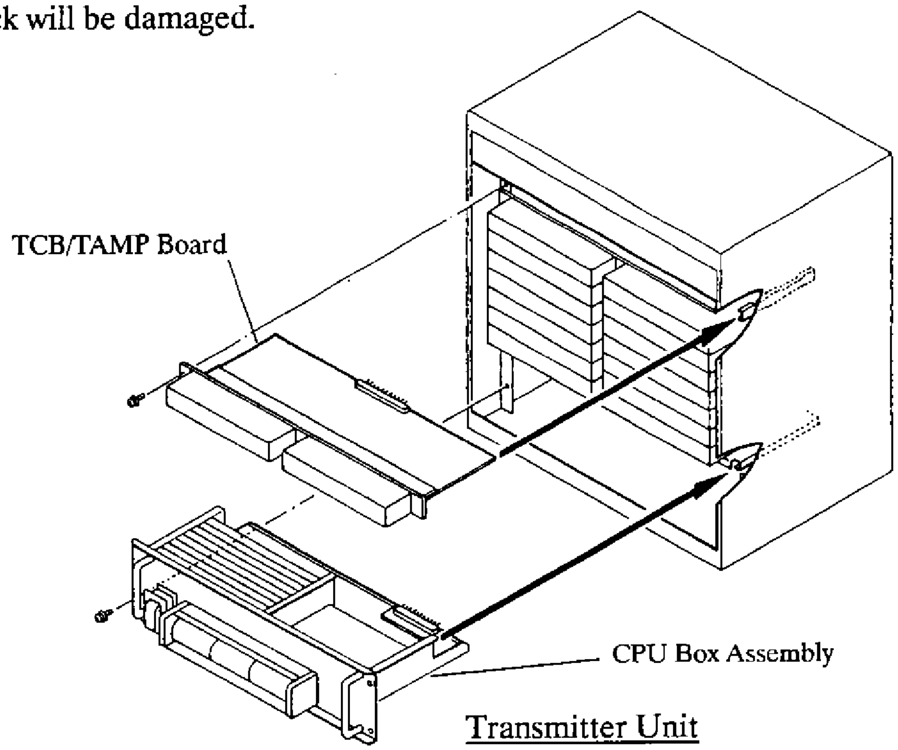

Transmitter Unit

2. If the raise/lower motor in the hull unit becomes overloaded due to net entanglement around the transducer or because of bent transducer shaft, the thermal relay in the raise/lower control box operates to cut off the power of the raise/lower motor. In this case, it is required to take appropriate measures referring to "Warning" on the operator's manual. This should be explained to the users at installation.

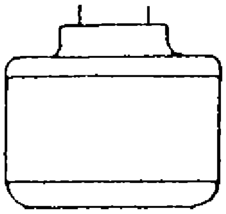

3. The transducer face has been coated with an antifouling paint so as to keep it free of sea-shells and fouling. It must be recoated at least once a year at dry docking. This should be also explained to the operator at installation.

   Use only “Marine Star 20Mod(Red-N)”type antifouling paint,manufactured in Japan by Chugoku Marine paint Co., Ltd. Coat only the transducer face; coating metal areas causes corrosion.

4. The power unit should be installed horizontally. Vertical installation on the bulkhead is not recommended.

5. Do not transmit with the transducer placed in air (i.e. at dry-docking). It will result in damage to the equipment.

Table of Contents

INSTALLATION CHECK LIST VI

1. Check on the slip or in Dry Dock vi
2. Final Check vii
Data Sheet for Sea Trial vii

SPECIFICATIONS OF COLOR SCANNING SONAR ix

Equipment List xiii
Accessaries xiv
Optional Supply Special Tools xiv
Installation Materials xv

CHAPTER 1. MOUNTING 1-1

1-1. Hull Unit 1-1
1.1.1. Installation Position of Hull Unit 1-1
1.1.2. Installation of Retraction Tank 1-3
1.1.3. Remarks for Installation of Retraction Tank 1-4
1.1.4. Installing Hull Unit on Retraction Tank 1-7
1.1.5. Measures against Vibration 1-8
1.1.6. Mounting Receiver Unit on Hull Unit 1-9
1.2. Display Unit 1-9
1.2.1. Mounting Display Unit 1-9
1.3. Power Unit 1-10
1.4. Transmitter Unit 1-10
1.5. Interface Unit 1-10
1.6. FNZ Joint Box 1-11
1.7. Grounding 1-11

CHAPTER 2. WIRING OF SONAR SECTION 2-1

2.1. List of Cables 2-1
2.2. Crimping Tool and Crimping Method 2-2
2.2.1. Wire Crimping Procedure 2-2
2.2.2. Procedure to Extract Contact Pin 2-2
Cable Fabrication and Connector Assembling in Display/Interface Units 2-5
Cable Fabrication and Connector Assembling in Power Unit 2-6
Cable Fabrication and Connector Assembling in Transmitter Unit 2-7
Cable Fabrication and Connector Assembling in Hull Unit (incl. Receiver Unit) 2-8
2.3. Connection of Transducer Cable 2-9
2.4. Connecting Sub-display Unit CSH-216 (Option) 2-11
2.4.1. Connection 2-11
2.4.2. DIP Switch Setting 2-11
2.5. Connecting Remote Display Unit CSH-106 (Option) 2-12
2.5.1. Connection 2-12

2.5.2. DIP Switch Setting 2-12
2.6. Synchronizing Transmission with Other Sonars/Echo Sounders 2-13
2.6.1. Wiring 2-13
2.6.2. Menu Setting 2-13
2.7. Interlocking Operation with Other Sonar 2-14
2.7.1. Interconnection 2-14
2.7.2. DIP Switch Setting 2-14
2.8. Interlocking Remote Control 2-15

CHAPTER 3. CONNECTING INTERFACE UNIT TO NAV SENSOR/ FISHING EQUIPMENT 3-1

3.1. Connections for True Motion and Target Lock Function 3-1
3.2. Connections for Echo Sounder Picture and FNZ Markers 3-2
3.3. Connections for Digital Readout of Ship's Position, Water Temperature and Depth 3-3
3.4. Wiring 3-4

CHAPTER 4. ALTERATION OF POWER SUPPLY 4-1

CHAPTER 5. ADJUSTMENT AND CHECK AT INSTALLATION 5-1

5.1. General 5-1
5.2. Wiring Check 5-1
5.3. Ship's Mains Voltage Check 5-1
5.4. Line Voltage Check 5-1
5.5. LED Status Check 5-3
5.5.1. Power Unit 5-3
5.5.2 Transmitter Unit 5-3
5.5.3 Receiver Unit 5-4
5.6. Voltage Adjustment Required after Installation 5-6
5.7. Check of Raise/Lower Operation 5-7
5.8. Heading Adjustment 5-9
5.9. Selection of Input Data (Interface Unit CS-120A) 5-10
5.10. Setting Net Sonde Transmitter Intervals 5-11
5.10.1. Setting Procedure 5-11
5.11. Interface Unit Adjustment 5-12
5.11.1. Adjustment of signal level (R36, R56) 5-12
5.11.2. Adjustment of white line inhibit time (R27) 5-13
5.11.3. Adjustment of white line output level (R55) 5-13
5.12. DIP Switch Setting 5-14
5.13. Self Test 5-14
5.13.1.Turning on/off Self Test 5-14
5.13.2. Interpreting Display 5-16

APPENDIX 1. STANDARD SETTING OF DIP SWITCHES AP1-1

Display Unit AP1-1
Transmitter Unit AP1-2
Receiver Unit AP1-3

INSTALLATION CHECK LIST

1. Check on the Slip or in Dry Dock

No.	Check Item	Ratings	Refer to page	Result
1	Retraction tank level	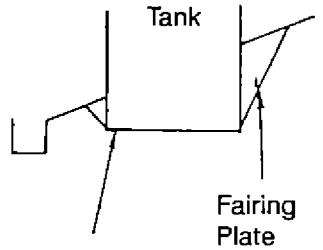 The retraction tank should not protrude below the keel level.	1-3 thru 1-5	
2	Transducer travel (lowered by hand crank) Note: When checking, a clearance of 1.5m or above is required under the bottom of the retraction tank.	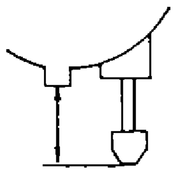 Minimum value 500mm	1-3 thru 1-5	cm
3	Clearance between the transducer and the bottom of retraction tank when the transducer is completely retracted by hand crank.	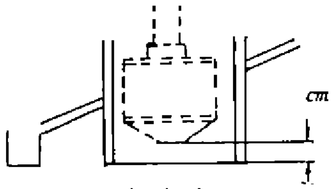 Recommended clearance:5cm		cm
4	Wiring check: 1. All cables are correctly connected. 2. All lead wires are tightly fixed with contact pins or crimp-on lugs. 3. All screws are sêcurely tightened. 4. No short circuit is present between lead wires. 5. Cables are firmly bound. 6. Cable shields are properly grounded.		Chapter2 Chapter3	
5	Connection of connectors	The connectors are securely plugged into the proper receptacles.		
6	Grounding	Each unit is grounded with a copper strap.	1-10	
7	Fixing of cable	Cables are securely fixed with the cable clamp or cable gland.		
8	Interference	TV set is not placed in the vicinity of the receiver unit.		

2. Final Check

No.	Check Item	Ratings	Refer to page	Result
1	Ship's mains (Input) voltage.	Ship's mains (Input) voltage is stable at around 100VAC	5-1	
2	Line voltage	Within ratings.	5-2	
3	Watertightness	Water should not leak from the flange or the top of shaft sleeve.	1-16 1-17	
4	Raise/Lower operations	Raise/lower operation of the hull unit can be independently controlled by the switch board in the raise lower control box.	5-7	
5	Heading Adjustment	Heading adjustment should be performed when the bow mark on the hull unit flange is not facing ship's bow.	5-9	
6	Selection of navigation and fishing data	The DIP switch(DP-1) in the interface unit is preset in accordance with the combined equipment.	5-10	
7	Adjustment of Interface unit	R27, R36, R55 and R56 in the interface unit are set properly.	5-12	
8	Presetting of FNZ marker's positions	The positions of net sonde transmitters are set on the FNZ switches in the interface unit.	5-11	
9	Recording of the data during sea trial		vii	
10	Operating instructions to operators		Operator's manual	

FULL CIRCLE COLOR SCANNING SONAR
DATA SHEET FOR SEA TRIAL

- SHIP NAME ________________ TYPE ________________ STEEL FRP WOODEN
- SERIAL NO. DISPLAY UNIT________________ HULL UNIT ________________
- HULL UNIT POSITION

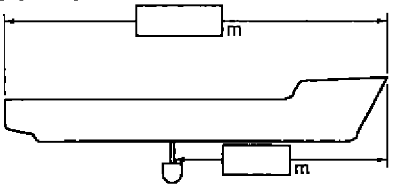

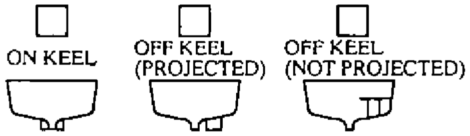

☐ PORT

☐ STARBOARD

XDCR TRAVEL _______ mm FROM KEEL _______ mm

XDCR TRAVEL FROM KEEL LINE _______ mm

- DATE ________________ TIME ________________
- PLACE ________________ DEPTH ________________ m
- WEATHER ________________ SEA CONDITION __________

RANGE ☐ m TILT ☐ °C TARGET ☐

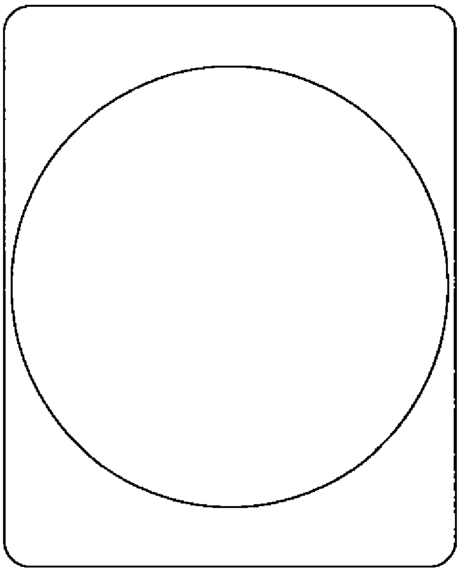

MODE ________________

GAIN ________________

CRT BRIL. ________________

TVG NEAR MEDIUM FAR

TX CYCLE ________________

TX OUTPUT ________________

PULSELENGTH ________________

NOISE LIM ________________

AGC ________________

IR ________________

HOR BEAM ________________

VER BEAM ________________

CRUISING NOISE at ☐ knots

☐

TIME TO HOIST XDCR DURING CRUISING ☐ sec.

REMARKS

☐

SPECIFICATIONS OF COLOR SCANNING SONAR

1. MODEL

CSH-21- □
CSH-22-

No.	1	2	3	4	5	6
Freq. (kHz)	24	28	32	40L	40H	45

CSH-21K- □

No.	4	5	6
Freq. (kHz)	40L	40H	45

CSH-21F- □
CSH-22F-

No.	1	2	3
Freq. (kHz)	24	28	32

2. DISPLAY

Picture: PPI display on 14"(CSH-21 series) or 20"(CSH-22 series) non-glare, high resolution color CRT

Color: 16 colors (echoes), 4 colors (mark)

Mode:
a) Normal
(with or without text)
b) Off-center
c) *True Motion
d) Echo Sounder Combination
e) Audio Combination
f) Port/Starboard Combination
g)Horizontal Slice Combination
h)Target Slice
i) Vertical Scanning (for CSH-21K/21F/22F)

Mark: Own Ship Mark, Heading Mark, Range Ring, Range/Bearing Mark, Trackball Mark, Event Mark, Net Shooting Mark, Fish Mark, *Electroric Cursor, *North Mark, *Track Mark, *Current Mark, *Net Sonde Mark.

Numeric Information:
Range, Tilt Angle, Gain
Range/Bearing Mark Data (Range, Bearing)
Trackball Mark Data (Slant range, Horizontal range, Depth, Bearing)
Event Mark Data (Horizontal range, Depth, First event mark depth, Bearing)

Fish Mark Data (Moving distance, direction and speed of fish)
Estimate Mark Data (Estimation of fish volume from echo strength)
Distance Run for Shoot Data (Time and *distance run for shooting net)
Setting Data (New setting of control is displayed for 5 seconds in larger character after change.)
*Nav Data (Ship's speed, Depth, Water temperature)
*Ship's Position Data (Latitude, Longitude)
*Current Data (Speed, Direction, Layer depth)
*Net Sonde Data (Net depth, Water temperature**, Distance to seabed*, Descending speed*)
**For FNZ-18

Other Features: Custom Mode, Interference Rejector, After image, Noise Limiter, Delete Color, Memory Card (Save and recall of echoes and net shooting data), Automatic Tilt, Target lock, External KP Sync, Heading-up, *North-up, Fish Alarm, Overvoltage Warning, Unretracted Transducer Warning, Remote Control

Items marked "*" are available when connected to external sensors, e.g., gyrocompass, speed log, nav-sensor, etc., via CS-120A Interface Unit.

3. RANGE, TX CYCLE, PULSELENGTH

For CSH-21/21K/22/22K

Basic Range	Range (m)		TX Cycle (sec)	Pulselength (msec)
	Off-center "OFF"	Off-center "ON"		
60	0 - 60	0 - 80	0.09 - 0.32	0.5 - 1.5
100	0 - 100	0 - 133	0.14 - 0.39	0.5 - 2
150	0 - 150	0 - 240	0.21 - 0.53	0.5 - 3
200	0 - 200	0 - 320	0.28 - 0.64	0.5 - 4
300	0 - 300	0 - 480	0.41 - 0.85	0.6 - 6
400	0 - 400	0 - 640	0.54 - 1.06	0.8 - 8
500	0 - 500	0 - 800	0.68 - 1.28	1.0 - 10
600	0 - 600	0 - 960	0.81 - 1.49	1.2 - 12
800	0 - 800	0 - 1280	1.08 - 1.92	1.5 - 15
1000	0 - 1000	0 - 1600	1.34 - 2.34	2.0 - 20
1200	0 - 1200	0 - 1920	1.61 - 2.77	2.5 - 25
1600	0 - 1600	0 - 2560	2.14 - 3.62	3.0 - 30
2000	0 - 2000	0 - 3200	2.68 - 4.48	4.0 - 40

For CSH-21F/22F

Basic Range	Range (m)		TX Cycle (sec)	Pulselength (msec)
	Off center "OFF"	Off center "ON"		
60	0 - 60	0 - 80	0.09 - 0.32	0.5 - 1.5
100	0 - 100	0 - 133	0.14 - 0.39	0.5 - 2
150	0 - 150	0 - 240	0.21 - 0.53	0.5 - 3
200	0 - 200	0 - 320	0.28 - 0.64	0.5 - 4
300	0 - 300	0 - 480	0.41 - 0.85	0.6 - 6
400	0 - 400	0 - 640	0.54 - 1.06	0.8 - 8
500	0 - 500	0 - 800	0.68 - 1.28	1.0 - 10
600	0 - 600	0 - 960	0.81 - 1.49	1.2 - 12
800	0 - 800	0 - 1280	1.08 - 1.92	1.5 - 15
1000	0 - 1000	0 - 1600	1.34 - 2.34	2.0 - 20
1200	0 - 1200	0 - 1920	1.61 - 2.77	2.5 - 25
1600	0 - 1600	0 - 2560	2.14 - 3.62	3.0 - 30
2000	0 - 2000	0 - 3200	2.68 - 4.48	4.0 - 40
3000	0 - 3000	0 - 4800	4.00 - 6.69	5.7 - 50
4000	0 - 4000	0 - 6400	5.30 - 8.86	7.6 - 50
5000	0 - 5000	0 - 8000	6.68 - 10.88	7.6 - 50
6000	0 - 6000	0 - 9600	8.01 - 13.01	7.6 - 50
8000	0 - 8000	0 12800	10.68 17.28	7.6 50
10000	0 - 10000	0 16000	13.34 21.54	7.6 50
12000	0 - 12000	0 19200	16.01 25.81	7.6 50

Note: 1. Transmission cycle is selectable in 10 steps.
2. External keying pulse can be used as a trigger.
3. Maximum range scale does not mean maximum detection range. Detection capability depends on nature of fish school and sea condition.

4. AUDIO SEARCH

Sector: 30°, 60°, 90°, 180°, 330° selectable.
Method: By built-in loudspeaker.
Output: 2W
Frequency: 1.1kHz with reverberation effect.

5. Transceiver

Transmitter: High power MOS FET amplifier with 10-step power reduction capability.
Receiver: Low noise superheterodyne, continuously scanning beam forming, TVG, AGC, signal processing interference rejector, horizontal/vertical beamwidth switching.

6. BEAMWIDTH(-3dB)/TILT ANGLE

TX Beamwidth	360° (horizontal)×10-13° (vertical)
RX Beamwidth	9-18° (horizontal)×11-14° (vertical)
Tilt Angle	-5° (upward) to 60° (downward) continuous by electric deflection

Note that the beamwidth differs depending on frequency.

7. HULL UNIT

	800 mm Travel	* 1200 mm Travel	1600 mm Travel
XDCR Travel	600 mm/800 mm	800 mm/1200 mm	1600 mm/1200 mm
Raising Time	16 sec (For 800 mm travel)	22 sec (For 1200 mm travel)	28 sec (For 1600 mm travel)
Lowering Time	15 sec (For 800 mm travel)	20 sec (For 1200 mm travel)	25 sec (For 1600 mm travel)
Driving System	Remote electric control		
Allowable Ship's Speed	18 knots (15 knots during raise/lower operation)		15 knots (12 knots during raise/lower operation)

8. POWER SUPPLY /POWER CONSUMPTION

100VAC, 50/60Hz, 1ø, 1.5kVA on average, 3.5kVA max.
110/220VAC with optional step-down transformer PT-400

9. COATING COLOR

Display Unit: N3.0 Newtone No.5 for front panel
2.5GY5/1.5 for cabinet
Others: Munsell 2.5G7/2 Newtone No.5

10. AMBIENT TEMPERATURE/ HUMIDITY

0°C-50°C, 85% or less

Equipment List

Standard Supply

No.	Name	Type	Dimensions (mm) W×H×D	Qty	Weight (kg)	Remarks
1	Display Unit	CSH-210	429×439×518	1	34	For CSH-21/21K
		CSH-210F				For CSH-21F
		CSH-2200	522×571×625		64	For CSH-22
		CSH-2200F				For CSH-22F
2	Transmitter Unit	CSH-310	630×644×380	1	96	For CSH-21/22
		CSH-310K				For CSH-21K
		CSH-310F II	720×719×400		110	For CSH-21F/22F
3	Receiver Unit	CSH-220	535×805×300	1	47	For CSH-21/22
		CSH-220K				For CSH-21K
		CSH-220F II				For CSH-21F/22F
4	Power Unit	CSH-380B	335×535×275	1	56	For CSH-21/21K/22
		CSH-380S				For CSH-21F/22F
5	Hull Unit	CSH-21080	1032×2050×831	1	673	800mm travel
		CSH-21120	1032×2450×831		812	1200mm travel
		CSH-21160	1032×2950×831		873	1600mm travel
6	Remote Control Box	CSH-116	72×180×18	1	0.4	
7	Interface Unit	CS-120A	320×190×75	1	3	
8	Retraction Tank	10-026-3011-2	ø760×1300	1	258.5	
9	Installation Materials			1 Set		
10	Spare Parts			1 Set		
11	Accessories			1 Set		

Optional Supply

No.	Name	Type	Dimensions (mm) W×H×D	Weight (kg)	Remarks
1	FNZ Joint Box	CS-170	240×123×58	2	
2	Step-down Transformer	PT-400	220×196×287	22	For display unit
3	E/S Interface Unit	VI-1100A	182×164×49	2	
4	Remote Display Unit	CSH-106	340×439×491	25	
5	Sub-display Unit	CSH-216/216F	420×439×518	33	

Accessories

No.	Name	Type	Code No.	Qty	Remarks
1	Vinyl Cover	10-051-1031	000-803-289	1	For display unit
2	Hood	FP20-01202	006-989-030	1	Ditto
3	Handle	10-002-1125-2	840-211-252	2	Ditto
4	Screw	M6×20	000-861-475	4	
5	Wave Washer	WW-6 SUS	000-864-350	4	
6	Washer	M6	000-864-910	4	
7	Hook	10-026-8226-1	100-008-801	1	For remote control box
8	Tapping Screw	3×14 SWRM10	000-800-172		Ditto

Optional Supply Special Tools

No.	Name	Type	Code No.	Outline
1	Crimping Tool	06-1011-016		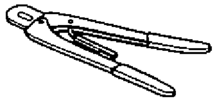
2	Pin Extractor	06-1877-04	000-519-595	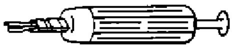
3	Guide Pin Setting Tool	10-910-0179-0		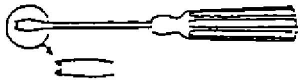

FURUNO

CODE NO.	006-996-260	10BW-X-9401-
TYPE	CP10-02701	

工事材料表 INSTALLATION MATERIALS	CSH-21/21K/21F CSH-22/22F CSH-251W/261W/ 271W/281W/281S/288W	カラースキャニングソナー COLOR SCANNING SONAR

番号 No.	名称 NAME	略図 OUTLINE	型名／規格 DESCRIPTIONS	数量 Q'TY	用途／備考 REMARKS
1	イラックスチューブ INSULATION TUBE	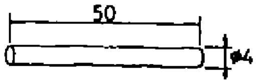	4MMX5CM キ YEL CODE NO. 000-100-923	1	
2	コネクタ CONNECTOR	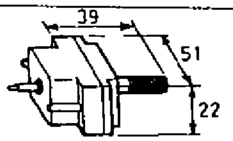	00-8016-038- 313761HV 10S1566-0 CODE NO. 000-127-234	1	
3	コネクタ CONNECTOR	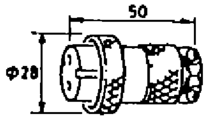	NCS-252-P CODE NO. 000-506-501	1	
4	コネクタ CONNECTOR	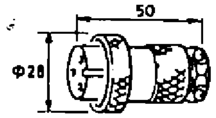	NCS-253-P CODE NO. 000-506-503	1	
5	クーラーパテ COOLER PUTTY	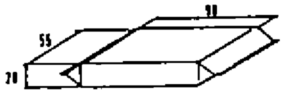	200Gイリ シロイロ CODE NO. 000-807-621	2	
6	アース板 COPPER STRAP		WEA-1004-0 CODE NO. 500-310-040	1	
			CODE NO.		
			CODE NO.		
			CODE NO.		
			CODE NO.		

指示装置工材
FOR DISPLAY UNIT

(略図の寸法は、参考値です。)

図番 (1/1)
DWG. NO. C1286-M01-F

FURUNO ELECTRIC CO., LTD

FURUNO

CODE No.	006-947-280	10BC-X-9402
TYPE	CP10-00300	-16

工事材料表 INSTALLATION MATERIALS

CSH-20/20S/20K/27W
CSH-26S2/26W2/28S/28W
CSH-20F2/88/288W

カラースキャニングソナー
COLOR SCANNING SONAR

番号 No.	名称 NAME	略図 OUTLINE	型名／規格 DESCRIPTIONS	数量 Q'TY	用途／備考 REMARKS
1	コネクタ CONNECTOR	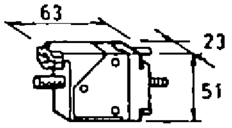	54-038-000-601/SC CODE No. 000-132-081	1	
2	コンタクト CONTACT PIN		60-8017-0313-00-339 CODE No. 000-519-542	120	
3	圧着端子 CRIMP-ON LUG	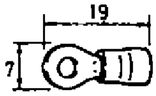	FV1.25-M4 アカ RED CODE No. 000-536-715	5	
4	圧着端子 CRIMP-ON LUG	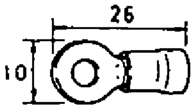	FV5.5-4 キ YEL CODE No. 000-538-123	5	
5	ホールプラグ HOLE PLUG	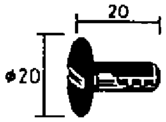	NO. 4567 CODE No. 000-800-729	4	
6	貼りマーク STICKER	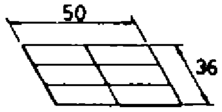	10-026-5002-0 CODE No. 100-004-870	1	
7	アース板 COPPER STRAP	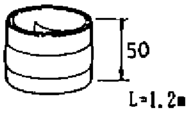	WEA-1004-0 CODE No. 500-310-040	1	
			CODE No.		
			CODE No.		
			CODE No.		

送信装置工材
FOR TRANSMITTER UNIT
CSH-21/21K/22/22F/251W/261W/271W/281W
281S

（略図の寸法は、参考値です。）

図番 DWG. No. C1257-M02-B (1/4)

FURUNO ELECTRIC CO., LTD

FURUNO

CODE NO.	006-947-290	10BC-X-9403
TYPE	CP10-00300	-1

工事材料表 INSTALLATION MATERIALS

CSH-20/20S/20K/27W
CSH-26S2/26W2/28S/28W
CSH-20F2

カラースキャニングソナー
COLOR SCANNING SONAR

番号 No.	名称 NAME	略図 OUTLINE	型名／規格 DESCRIPTIONS	CODE NO.	数量 Q'TY	用途／備考 REMARKS
1	コネクタ CONNECTOR	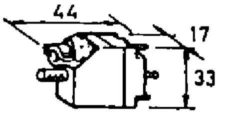	00-8016-020-313-703V	000-111-143	1	
2	コネクタ CONNECTOR	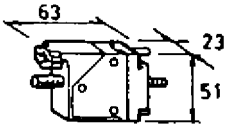	54-038-000-601/SC	000-132-081	1	
3	コンタクト CONTACT PIN	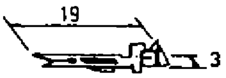	60-8017-0313-00-339	000-519-542	114	
4	シールドスリーブ SHIELD SLEEVE	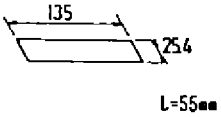	ZS-06H *0.055M*	000-807-634	20	
5	アイボルト EYE-BOLT	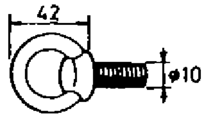	M10 SS41 MFNI2	000-862-506	2	
6	ミガキ平座金 FLAT WASHER	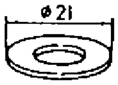	M10 SS41 MFZN2-B	000-864-191	2	
7	貼りマーク(11) STICKER(11)	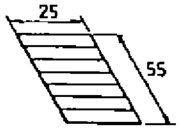	10-026-0619-0	100-014-880	1	
8	アース板 COPPER STRAP	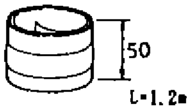	WEA-1004-0	500-310-040	1	

受信装置工材
FOR RECEIVER UNIT
CSH-21/21K/21F/22/22F
251W/261W/271W/281W/281S/288W/88

(略図の寸法は、参考値です。)

図番 DWG. NO. C1257-M03-B (2/4)

FURUNO ELECTRIC CO., LTD

FURUNO

CODE NO.	006-947-300	10BC-X-9404 -1
TYPE	CP10-00300	

工事材料表
INSTALLATION MATERIALS

CSH-20/20S/20K/27W
CSH-26S2/26W2/28S/28W
CSH-20F2/88/288W

カラースキャニングソナー
COLOR SCANNING SONAR

番号 No.	名称 NAME	略図 OUTLINE	型名／規格 DESCRIPTIONS	CODE NO.	数量 Q'TY	用途／備考 REMARKS
1	コネクタ CONNECTOR	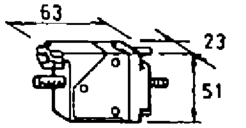	54-038-000-601/SC	000-132-081	1	
2	コンタクト CONTACT PIN		60-8017-0313-00-339	000-519-542	50	
3	圧着端子 CRIMP-ON LUG	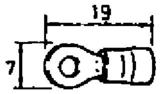	FV1.25-M4 アカ RED	000-536-715	6	
4	圧着端子 CRIMP-ON LUG	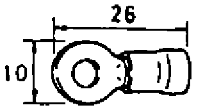	FV5.5-4 キ YEL	000-538-123	15	
5	ホールプラグ HOLE PLUG	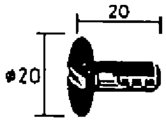	NO. 4567	000-800-729	4	
6	貼りマーク(1) STICKER(1)	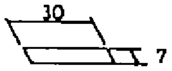	10-026-7018-0	100-008-630	1	

電源装置工材
FOR POWER UNIT
CSH-21/21K/21F/22/22F
251W/261W/271W/281W/281S/288W/88

(略図の寸法は、参考値です。)

図番 DWG. NO. C1257-M04-B (3/4)

FURUNO ELECTRIC CO., LTD

FURUNO

CODE NO.	006-947-310	10BC-X-9408-
TYPE	CP10-00300	

工事材料表
INSTALLATION MATERIALS

CSH-20/20S/20K/27W
CSH-26S2/26W2/28S/28W
CSH-20F2/88/288W

カラースキャニングソナー
COLOR SCANNING SONAR

番号 No.	名称 NAME	略図 OUTLINE	型名／規格 DESCRIPTIONS	数量 Q'TY	用途／備考 REMARKS
1	圧着端子 CRIMP-ON LUG	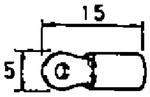	FV1.25-3.7 アカ RED CODE NO. 000-108-699	15	
2	圧着端子 CRIMP-ON LUG	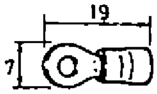	FV1.25-M4 アカ RED CODE NO. 000-536-715	5	
3	圧着端子 CRIMP-ON LUG	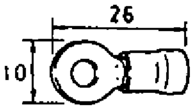	FV5.5-4 キ YEL CODE NO. 000-538-123	5	
			CODE NO.		
			CODE NO.		
			CODE NO.		
			CODE NO.		
			CODE NO.		
			CODE NO.		
			CODE NO.		

上下装置工材
FOR HULL UNIT
CSH-21/21K/21F/22/22F
251W/261W/271W/281W//281S/288W/88

（略図の寸法は、参考値です。）

図番 DWG. NO. C1257-M05-B (4/4)

FURUNO ELECTRIC CO., LTD

FURUNO

CODE NO.	006-935-300	10BC-X-9409-
TYPE	CS-120-C	

工 事 材 料 表 INSTALLATION MATERIALS	CSH-20/20S/20K/27W CSH-26S2/26W2/28S/28W CSH-20F2/88/288W	ｶﾗｰｽｷｬﾆﾅｸﾞｿﾅｰ COLOR SCANNING SONAR

番号 No.	名 称 NAME	略 図 OUTLINE	型名／規格 DESCRIPTIONS	数量 Q'TY	用途／備考 REMARKS
1	ｺﾈｸﾀ CONNECTOR	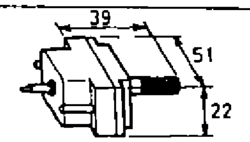	00-8016-038-313761HV 10S1566-0 CODE NO. 000-127-234	1	
2	ｺﾈｸﾀ CONNECTOR	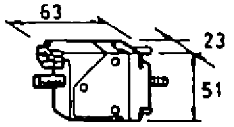	54-038-000-601/SC CODE NO. 000-123-081	1	
3	ｺﾈｸﾀ CONNECTOR	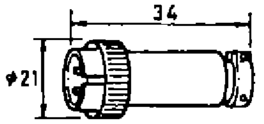	RM15TP-2PA CODE NO. 000-503-314	1	
4	ｺﾈｸﾀ CONNECTOR	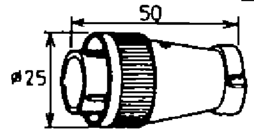	SRCN6A16-7P CODE NO. 000-508-662	1	
5	ｺﾈｸﾀ CONNECTOR	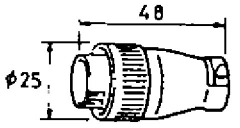	SRCN6A16-10P CODE NO. 000-508-663	4	
6	ｺﾝﾀｸﾄ CONTACT PIN	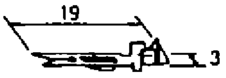	60-8017-0313-00-339 CODE NO. 000-519-542	38	
7	貼りﾏｰｸ(J201) STICKER (J201)	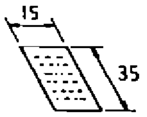	10-018-5022 CODE NO. 181-850-220	1	
8	ｱｰｽ線 GROUNDING WIRE	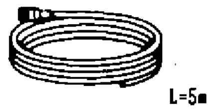	CS-120-C *BLUE-5M* CODE NO. 006-937-990	1	
			CODE NO.		
			CODE NO.		

外部ｲﾝﾀｰﾌｪｲｽ工材
FOR CS-120A INTERFACE UNIT
CSH-21/21K/21F/22/22F/251W/261W/271W
281W/281S/88

(略図の寸法は、参考値です。)

図番 DWG. NO. C1257-M08-A (1/1)

FURUNO ELECTRIC CO., LTD

FURUNO

C1286-M05-B

CODE No.	000-068-920	10BW-X-9405
TYPE	CP10-02700	

工事材料表 INSTALLATION MATERIALS	CSH-21/21K/21F CSH-22/22F CSH-288W	カラースキャニングソナー COLOR SCANNING SONAR	

番号 No.	名称 NAME	略図 OUTLINE	型名／規格 DESCRIPTIONS	数量 Q'TY	用途／備考 REMARKS
1	6ツイストケーブル 6P TWISTED PAIR CABLE	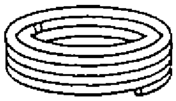 L=5m	10S1261-0 *5M* (CO-SPEV-SB 0.3X6P) CODE No. 000-100-992	1	CSH-220A/K/F2 ⇔ 21080 21120 21160

FURUNO

C1286-M06-A

CODE No.		10BW-X-9406
TYPE		

工事材料表 INSTALLATION MATERIALS	CSH-21/21K/21F	カラースキャニングソナー COLOR SCANNING SONAR	

番号 No.	名称 NAME	略図 OUTLINE	型名／規格 DESCRIPTIONS	数量 Q'TY	用途／備考 REMARKS
1	16ツイストケーブル 16P CABLE	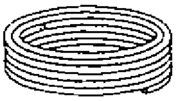	10S1260-0 *( )M (CO-SPEV-SB-C 0.5X16P) CODE No. 000-101-008	1	CSH-220A/K/F2 ⇔ 310/K/F2 380/B/S
2	複合37芯ケーブル 37C CABLE	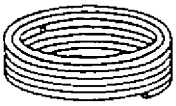	10S1258-1 *( )M VV-SB 12/0.18X1SB C 12/0.18X18PSB CODE No. 000-101-006	1	CSH-210/F ⇔ CS-120A CSH-210/F ⇔ 310/K/F2
3	複合7芯ケーブル 7C CABLE	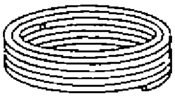	10S1259-1 *( )M F-CO-VV-C 3X3.5 +1PX0.5+1PX1.25SQ CODE No. 000-101-007	1	CSH-380B/B/S ⇔ 310/K/F2 ⇔ 21080/21120/21160

FURUNO

C1286-M07-C

CODE No.	006-989-000	10BW-X-9407-
TYPE	CP10-02801	

工事材料表 INSTALLATION MATERIALS	CSH-216/216F CSH-106	副指示器 SUB-DISPLAY リモートディスプレイ REMOTE DISPLAY		

番号 No.	名称 NAME	略図 OUTLINE	型名／規格 DESCRIPTIONS	数量 Q'TY	用途／備考 REMARKS
1	イラックスチューブ INSULATION TUBE	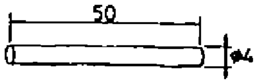	4MMX5CM ‡ YEL CODE No. 000-100-923	1	
2	コネクタ CONNECTOR	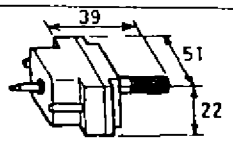	00-8016-038- 313761HV 10S1566-0 CODE No. 000-127-234	2	
3	コネクタ CONNECTOR	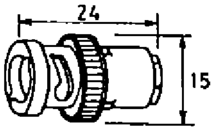	BNC-P-3 CODE No. 000-500-396	6	
4	コネクタ CONNECTOR	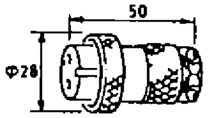	NCS-252-P CODE No. 000-506-501	1	
5	コネクタ CONNECTOR	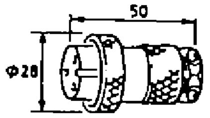	NCS-253-P CODE No. 000-506-503	1	
6	クーラーパテ COOLER PUTTY	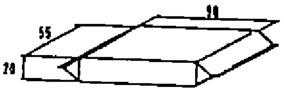	200Gイリ シロイロ CODE No. 000-807-621	2	
7	アース板 COPPER STRAP	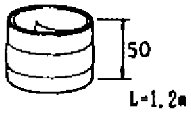	WEA-1004-0 CODE No. 500-310-040	1	

FURUNO

C1286-M08-B

CODE No.	006-989-000	10BW-X-9408-
TYPE	CP10-02801	

工事材料表 INSTALLATION MATERIALS	CSH-216/216F CSH-106	副指示器 SUB-DISPLAY リモートディフプレイ REMOTE DISPLAY		

番号 No.	名称 NAME	略図 OUTLINE	型名／規格 DESCRIPTIONS	数量 Q'TY	用途／備考 REMARKS
1	同軸ケーブル COAXIAL CABLE	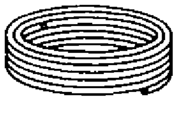	ECX3C-2V-T *( )M CODE No. 000-122-162	1	CSH-216/F 210/F

FURUNO

C1286-M09-A

CODE NO.	006-989-000	10BW-X-9409
TYPE	CP10-02801	

工事材料表 INSTALLATION MATERIALS	CSH-106	ﾘﾓｰﾄﾃﾞｨｽﾌﾟﾚｲ REMOTE DISPLAY		

番号 No.	名称 NAME	略図 OUTLINE	型名／規格 DESCRIPTIONS	数量 Q'TY	用途／備考 REMARKS
1	同軸ｹｰﾌﾞﾙ COAX. CABLE	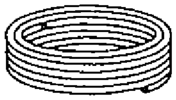	ECX3C-2V-T *( )M CODE NO. 000-122-162	1	CSH-106 ⇔ 210/F

FURUNO

C1286-M10-A

CODE NO.	006-989-000	10BW-X-9410
TYPE	CP10-02801	

工事材料表 INSTALLATION MATERIALS	CSH-106	ﾘﾓｰﾄﾃﾞｨｽﾌﾟﾚｲ REMOTE DISPLAY		

番号 No.	名称 NAME	略図 OUTLINE	型名／規格 DESCRIPTIONS	数量 Q'TY	用途／備考 REMARKS
1	ｲﾗｯｸｽﾁｭｰﾌﾞ INSULATION TUBE	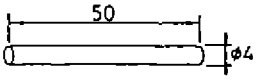	4MMX5CM 黄 YEL CODE NO. 000-100-923	1	
2	ｺﾈｸﾀ CONNECTOR	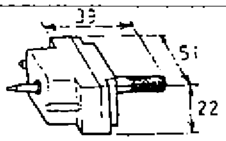	00-8016-038-313761HV CODE NO. 000-127-234	2	
3	ｺﾈｸﾀ CONNECTOR	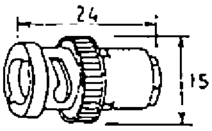	BNC-P-3 CODE NO. 000-500-396	6	
4	ｺﾈｸﾀ CONNECTOR	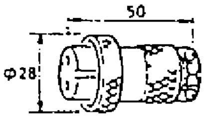	NSC-252-P CODE NO. 000-506-501	1	
5	ｱｰｽ銅板 COPPER STRAP	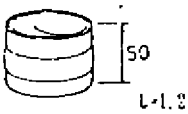	WEA-1004-0 CODE NO. 500-310-040	1	

CHAPTER 1. MOUNTING

1-1. Hull Unit

1.1.1. Installation Position of Hull Unit

Discussion and agreement are required with the dockyard and the ship owner in deciding the installation position of the hull unit. When deciding the installation position, the following points should be taken into account.

1) Select an area where propeller noise, cruising noise, air bubbles and interference from turbulence are at a minimum. Generally, the point at 1/3 to 1/2 of the ship's length from the bow on or near the keel is optimum. On-the-keel installation is advantageous for minimizing oil consumption in comparison with off-the-keel. In case the hull unit can not be installed on the keel, the center of the retraction tank should be within 600mm of the keel so as to prevent a rolling effect.

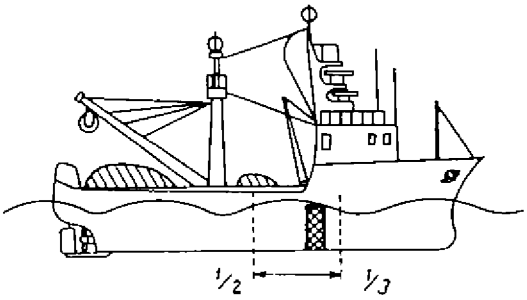

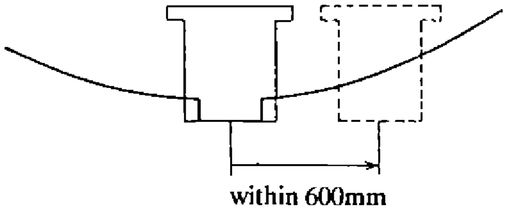

2) Select a place where the hull bottom is flat and the draft is sufficiently deep. Normally, the transducer should protrude at least 500mm beyond the keel to minimize the effect of air foam and bubbles.

3) Select a place where interference from other equipment is minimal. The hull unit should be at least 2.5m away from the transducers of other equipment.

4) An obstacle in the fore direction not only causes shadow zone but also aerated water, resulting in poor sonar performance.

5) The following space is required around the hull unit for wiring and maintenance. If the ambient temperature of the unit is below 0°C, the sonar compartment must be provided with a heater so as to keep the temperature above 0°C.

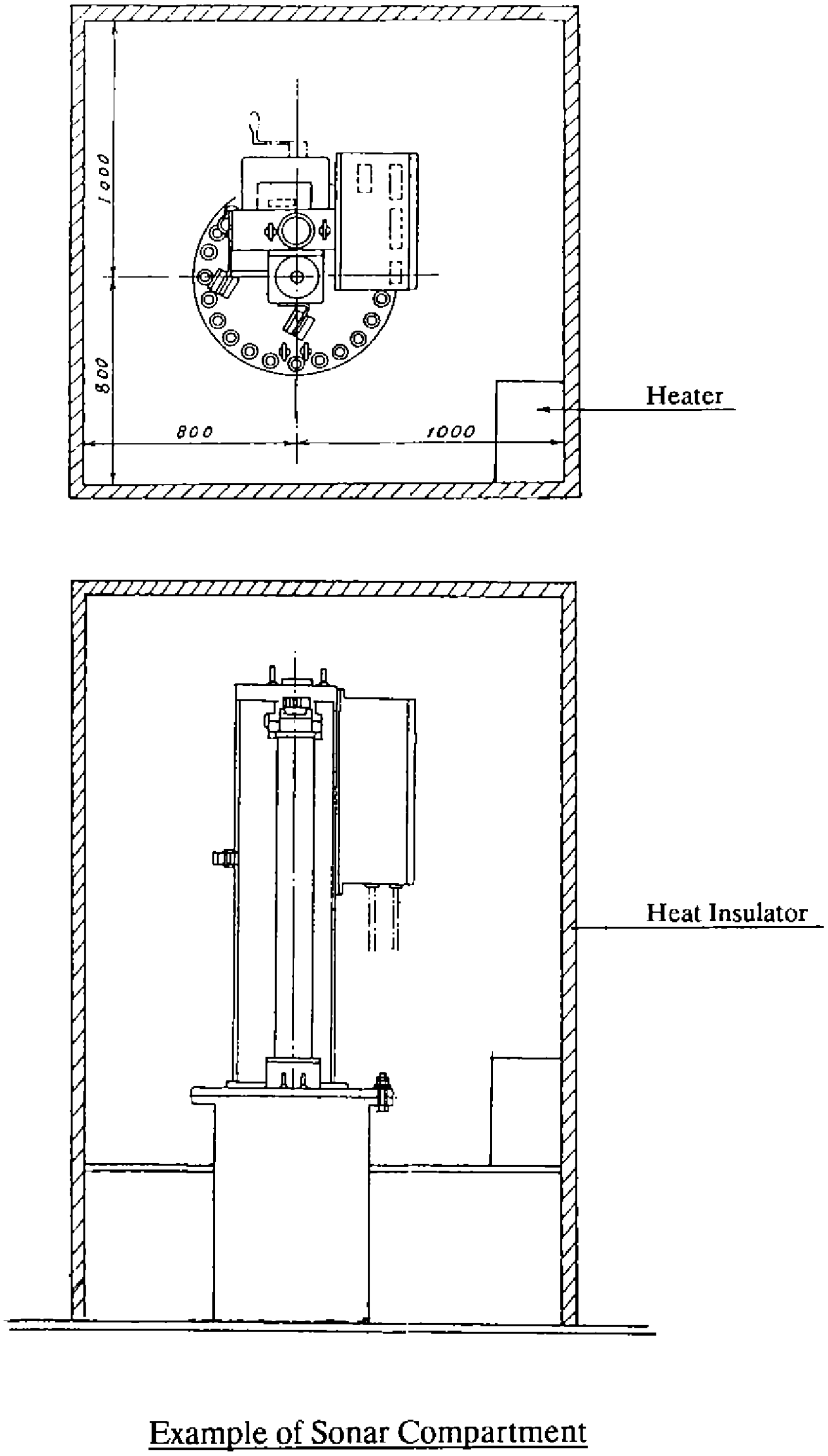

Example of Sonar Compartment

1.1.2. Installation of Retraction Tank

The retraction tank is 1300mm in length when supplied. Cut off the spare portion of the tank so that the transducer is placed well below the keel level when it is lowered. The following table shows the guideline for cutting the tank. Refer also to page 1-5 for detailed tank installation method.

Installation Method / XDCR Travel	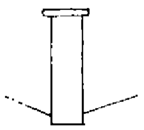	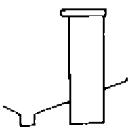	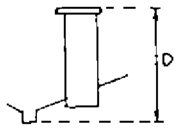	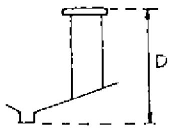
800mm	Remove 297 thru 382mm from the bottom.	Same as left	Remove 297 thru 382mm from the bottom. Note that the length "D" must be less than 1003mm.	Same as left
1200mm	Remove 97 thru 382mm from the bottom.	Same as left	Remove 97 thru 382mm from the bottom. Note that the length "D" must be less than 1203mm.	Same as left
1600mm	Remove within 282mm from the bottom.	Same as left	Remove within 282mm from the bottom. "D" must be less than 1703mm.	Same as left

Note 1. In the 800mm type hull unit, more than 297mm must be removed from the bottom so that the transducer fully protrudes from the tank. If more than 382mm is cut, entire length of the transducer can not be retracted into the tank.

2. In the 1200mm type hull unit, the transducer will not fully protrude unless 97mm is removed from the bottom, and will not retract if more than 382mm is removed.

3. In the 1600mm type hull unit, the transducer will not retract if more than 282mm is cut.

4. When 382mm (282mm for 1600mm type) is removed and "D" is minimum, the effect of air foam is minimized because of the maximum protrusion of the transducer into the water.

1.1.3. Remarks for Installation of Retraction Tank

1) Make, if possible, the installation location a double bottom structure.

2) Install, if possible, the tank on the keel where the tank can be most firmly fixed.

3) Install the reinforcement rib as near as possible to the top of the retraction tank, allowing for a space for tightening bolts and nuts.

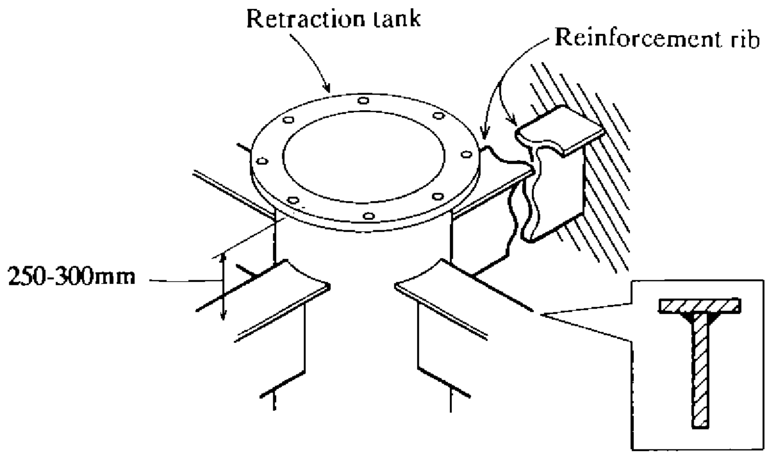

4) When an attachment flange is used, install reinforcement ribs to the attachment flange.

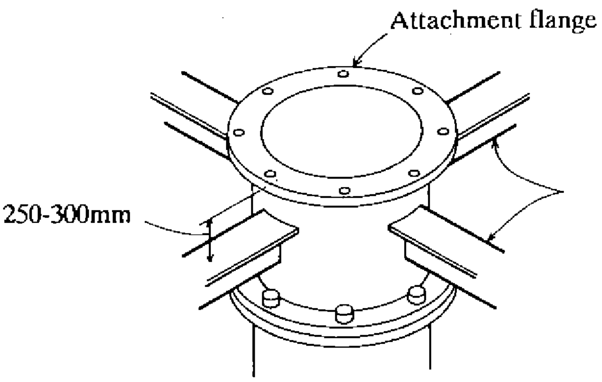

5) Add a doubling plate at the location where the retraction tank is welded to the hull bottom. The size of the doubling plate is normally 1200mm to 1300mm in diameter so it may lie across two bottom frames.

FURUNO

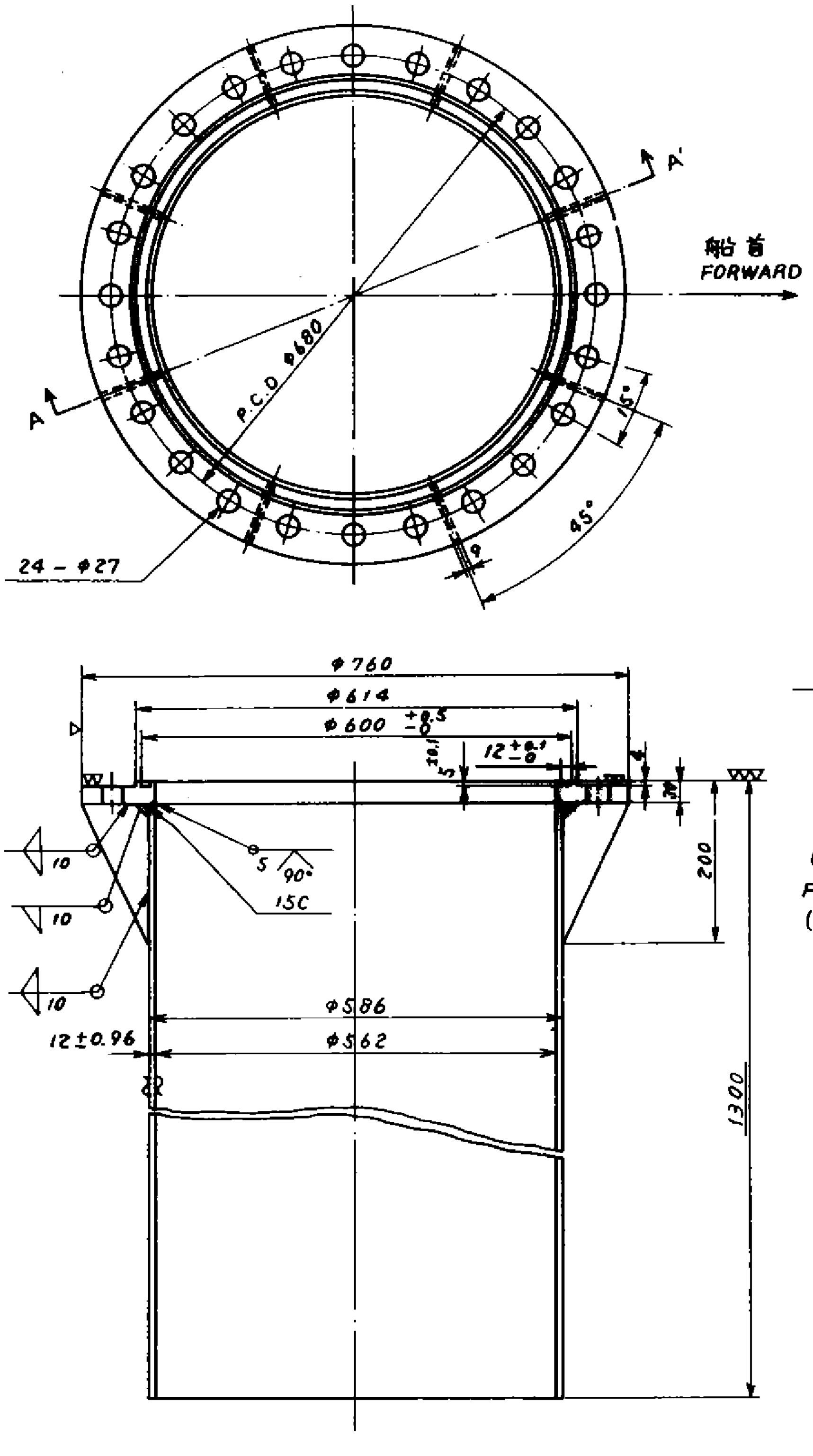

SECTION A-A'

NOTE 装備時の注意

1. 24個のボルト穴のうち適当な1個を船首方向に一致させる。
ONE OF 24 BOLT HOLES SHOULD FACE DEAD AHEAD.

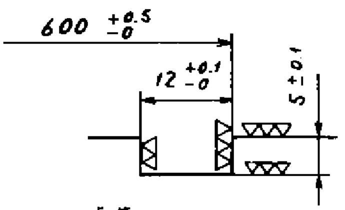

Oリング溝の仕上げ図
FINISHING OF O-RING GROOVE
(尺度 SCALE 1/1)

CSHシリーズ用
CSH SERIES

品番 ITEM	品名 NAME	材質 MATERIAL	数量 Q'TY	図番 DWG.NO.	摘要 REMARKS

承認 APPROVED	Feb. 17. '84	三角法 THIRD ANGLE PROJECTION		名称 TITLE	格納タンク RETRACTION TANK
検図 CHECKED	Feb. 17. '84	尺度 SCALE	1/10		
製図 DRAWN	Feb. 17. '84	重量 WEIGHT	258.5kg	図番 DWG. NO.	C1257-074-A

FURUNO ELECTRIC CO., LTD.

FURUNO

Ⓐ キール上（突出） ON KEEL (PROJECTED)

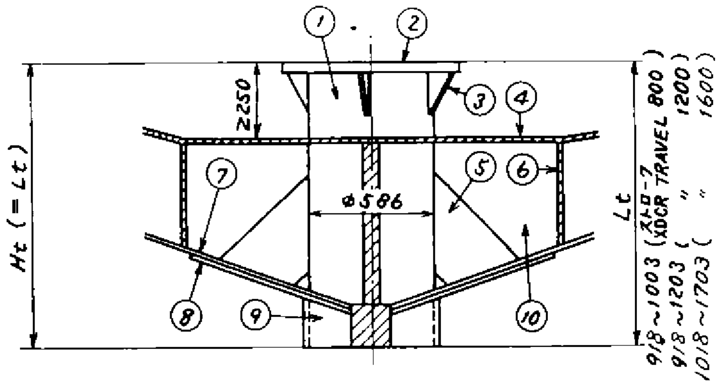

Ⓑ キール横（突出） OFF KEEL (PROJECTED)

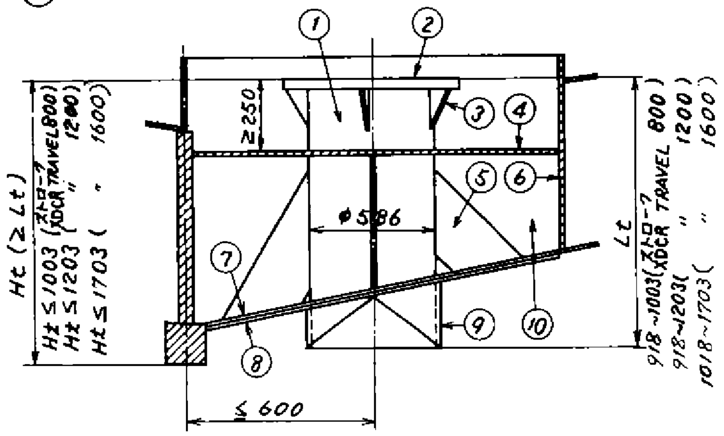

Ⓒ キール横（非突出） OFF KEEL (NOT PROJECTED)

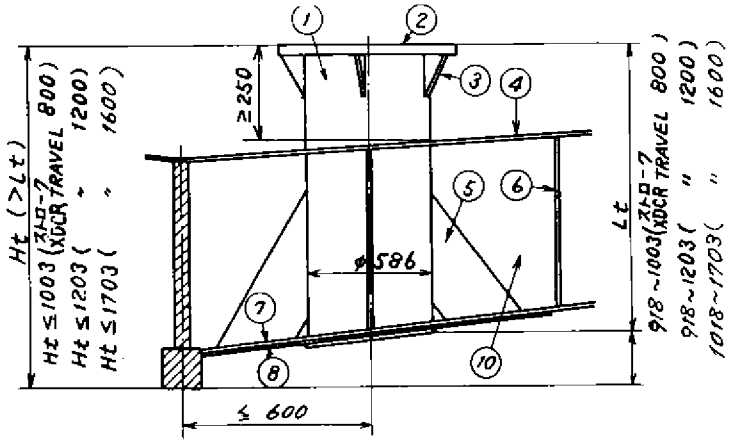

Ⓓ 整流覆 FAIRING PLATE

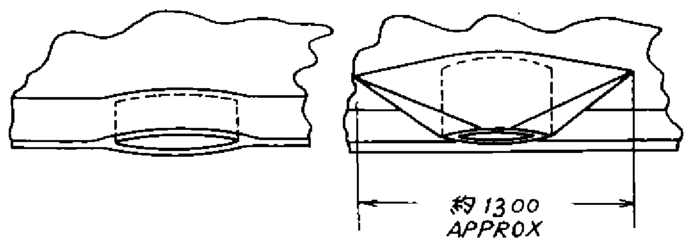

装備手順

1. 船底板及び二重船底板に φ586 の穴を明ける。
2. 次の点に注意して格納タンクを船底板に連続スミ肉溶接する。
   * タンクのフランジ面が標準走航時に水平になる事。
   * フランジ面のボルト穴の中心が船首方向になる事。
   * 送受波器を突出させた時に送受信ビームがキールで遮られないように、フランジ面のキールよりの高さ"Ht"を図示の範囲内にする事。
   * タンク下端がキールより下に出ないようにタンクの長さ"Lt"は"Ht"より短くする。且つ、送受波器がタンク下端より出ないように図示の範囲内にする。（標準支給長1300 mm）
3. 格納タンクの周囲に外径φ1300以上のダブリング⑧を取り付ける。又、突出装備（Ⓐ、Ⓑ）の場合には整流覆⑨（D図）を取り付ける。ダブリングと整流覆には、船底板と同じ材質、肉厚のものを使用する事。
4. タンク周囲に油槽がある場合には、隔壁⑥をめぐらせ、コファダム⑩を設ける事。
5. タンク周囲4ヶ所以上に補強板⑤を溶接する。
6. 上下装置本体を格納タンクにボルト締めするのに必要なスペースとして、フランジ面の位置が2重船底板より 250 mm 以上離す。2重船底が高い船には Ⓑ 図の方法で2重船底板を下げ、スペースを確保すること。

INSTALLATION METHOD OF RETRACTION TANK

1. Cut out ∅ 586 hole on hull and inner hull plate.
2. Install tank to hull plate with fillet welding taking the following points into account.
   * Flange face is exactly horizontal at normal Ship's trim.
   * One of 24 bolt holes on flange is faced dead ahead.
   * Allow height of flange face from keel bottom "Ht" mentioned in the drawings, otherwise transducer beam is blocked by the keel when transducer is fully lowered.
   * Tank's length "Lt" should be less than "Ht". If not so, bottom end of tank is placed below keel level. "Lt" is also limited as shown in the drawings so that the transducer can be fully retracted in tank. (The tank is supplied with 1300mm long as standard.)
3. Fit doubling plate ⑧ of outer dia. ∅ 1300 around the tank on hull plate. Fit fairing plate ⑨ referring to the drawing Ⓓ for installation method Ⓐ and Ⓑ. Use same material and thickness of doubling and fairing plate as hull plate.
4. Provide cofferdam around the tank in order to isolate the tank from the oil tank.
5. Install 4 pcs. of reinforcement plates between the tank and the hull plate.
6. Allow clearance of more than 250mm below the flange face for easy bolting. Sink the inner hull plate as shown in the drawing Ⓑ for high inner hull plate.

品番 ITEM	品名 NAME	材質 MATERIAL	数量 Q'TY	図番 DWG.NO.	摘要 REMARKS
10	コファダム COFFERDAM				
9	整流覆 FAIRING PLATE				
8	ダブリング DOUBLING				
7	船底板 HULL PLATE				
6	油槽隔壁 BULKHEAD				
5	補強板 REINFORCEMENT PLATE				
4	二重船底板 INNER HULL PLATE				
3	補強リブ REINFORCEMENT RIB				
2	タンクフランジ TANK FLANGE				
1	格納タンク RETRACTION TANK				

CSH-20/21 SINGLE freq.

注） CSH-20S/20F/21Fでは 1200/1600ストロークのみ。

FOR 1300mm TANK

承認 APPROVED	JAN 14, '85 [signature]	三角法 THIRD ANGLE PROJECTION		名称 TITLE	格納タンク装備要領図（鋼船） INSTALLATION METHOD OF RETRACTION TANK(STEEL HULL)
検図 CHECKED	Jan 12, '85 [signature]	尺度 SCALE	/		
製図 DRAWN	Dec 17 '84 [signature]	重量 WEIGHT	kg	図番 DWG. NO.	C1257-082-C

1.1.4. Installing Hull Unit on Retraction Tank

After welding the retraction tank and allowing sufficient time for cooling, install the hull unit by the following procedure.

1) Place the O-ring in position on the tank flange. Clean both the O-ring and O-ring groove and apply a slight coat of grease over them before fitting the O-ring.

2) Place the insulation packings (1) on the bolt holes of the tank flange.

3) Orient the hull unit so that the HEAD mark on its flange points toward the ship's bow. Note that heading adjustment in the display unit is required if the HEAD mark does not face the ship's bow.

4) Of the 24 bolt holes on the hull unit flange, eleven holes have already been fitted with bolts. Insert the insulation packing (2) into the bolt holes of the tank flange to which these eleven bolts are fitted. Note that it is difficult to fit them after the hull unit has been placed on the tank.

5) Place the hull unit on the tank, taking the following points into account.
   * The flange surface should be cleaned beforehand.
   * The O-ring and the insulation packing (1) should be in position.

6) Fit the insulation packings (2) into the bolt holes of both the tank and hull unit flanges, and then secure the two flanges by using the insulation packings (1), flat washers, spring washers and hex. bolts.

   NOTE: Apply a slight coat of grease over every bolt, washer and nut to ease removal at future service work.

7) Reinforce the hull unit against vibration by extending the stays to the ship's hull from the two eyebolts on top of the hull unit.

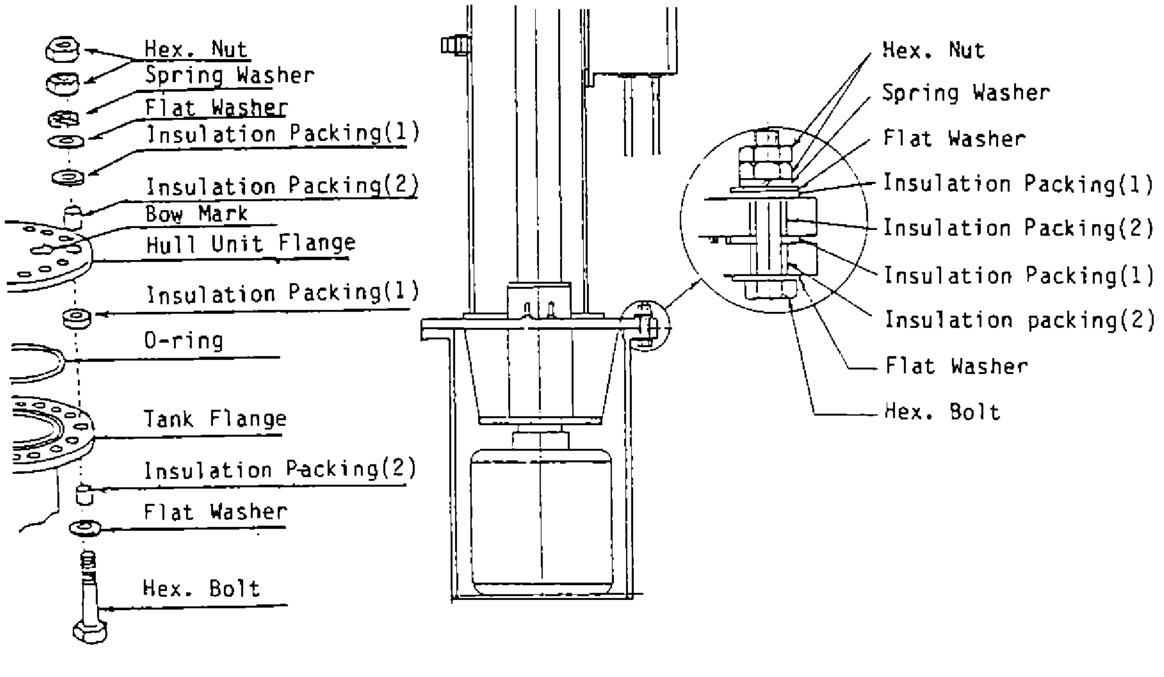

1.1.5. Measures against Vibration

Install the stays from the top of the hull unit to the ship's hull. The stays should be solid enough (e.g. angle iron with a size of 75×75×9mm or more) and used at least 2 pieces; one each to ship's bow and stern directions. Install if possible, two more stays in ship's transverse direction.

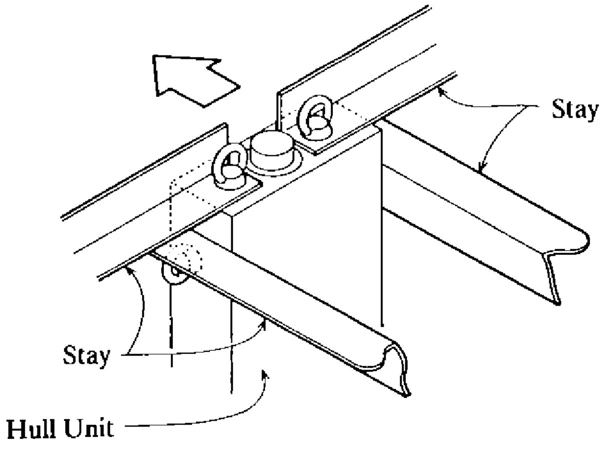

Do not install the stays as shown below. Vibration-resistant effect is reduced since vibration is applied to the stays as rotation force. Intall them horizontally.

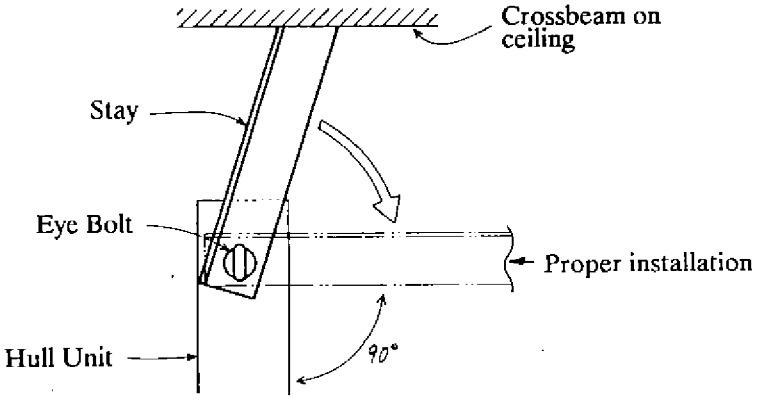

1.1.6. Mounting Receiver Unit on Hull Unit

The hull unit is shipped with the receiver unit removed. Mount it on the left side of the hull unit as shown at right.

Note : A transducer cable protection cover has been fitted on the receiver unit mounting location of the hull unit. Remove it when mounting the receiver unit.

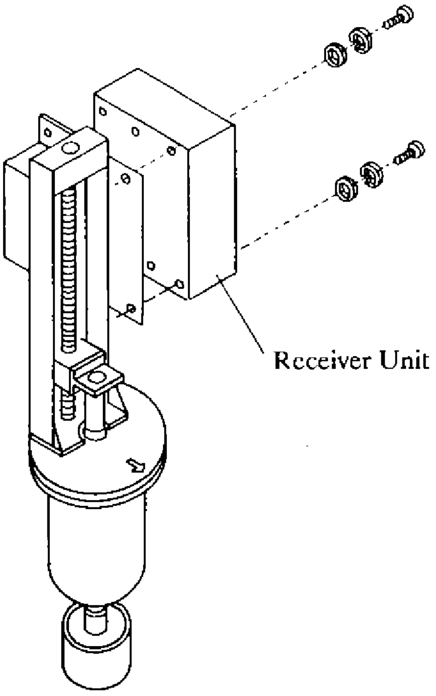

1.2. Display Unit

The display unit can be installed in any well ventilated location in the steering house, provided that the following conditions are met.

1) Place where operating personnel are able to control the unit easily while observing the fishing ground or the area surrounding the vessel.

2) Place at least 1m away from magnetic components (radar magnetron, loudspeaker, high power transformer, etc.) and magnetic compass.

3) Place not exposed to direct sunlight, water splashes or hot air.

4) Place where maintenance and ventilation clearance shown in the outline drawings is ensured.

5) Place where the CRT face is within ±45° from the vertical.

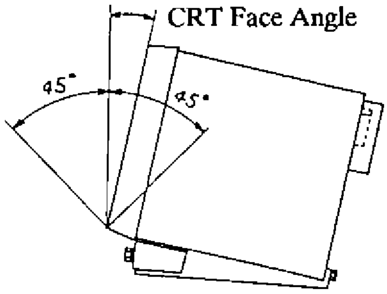

1.2.1. Mounting Display Unit

1. Remove the mounting base by loosening the two bolts at the front bottom.

2. Fix the mounting base onto the table by using four M10 bolts, flat washers, spring washers and nuts. Ensure that the table is strong enough to support the weight of the display unit. It is recommended that a rubber mat be placed under the mounting base to reduce vibration.

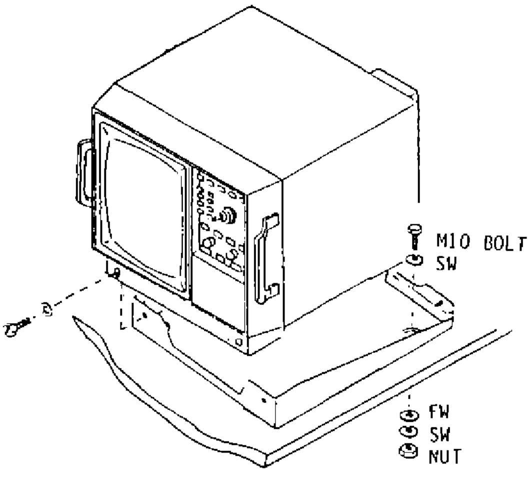

3. Settle the unit on the mounting base with two bolts. When the space around the unit is limited, make wirings to the display unit first and then settle the unit.

1.3. Power Unit

The power unit can be installed in any dry well ventilated space.

1.4. Transmitter Unit

The transmitter unit can be installed with either the outside legs or the inside mounting holes. It is delivered for outside leg mounting and to install it with the inside holes, the outside legs should be removed at installation.

The transmitter unit should be reinforced against vibration by stays extended from the eyebolts on the top of the unit.

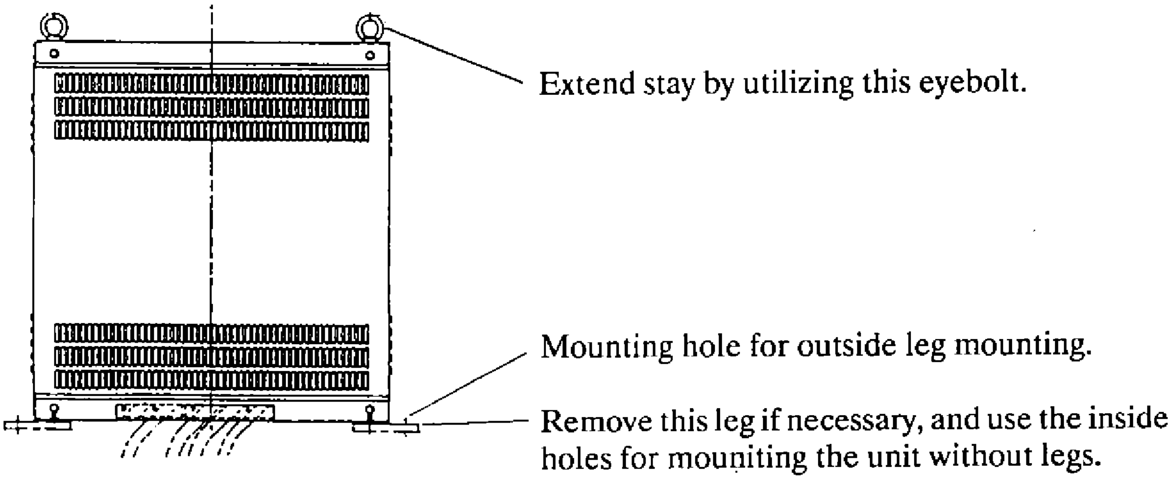

1.5. Interface Unit

Since the interface unit is used for connection with several navigation and fishing equipment, determine the installation site with the wirings to them taken into account. In addition, since the unit incorporates a data selector and self-check switch, select a place where easy access to the unit is ensured.

1.6. FNZ Joint Box

The FNZ joint box is used for interchanging both TX trigger and sonde marker pulses from the echo sounder and the net sonde, therefore it should be installed as close as possible to Netsonde.

1.7. Grounding

Since all units are very sensitive to noise, they should be grounded with the specified copper strap or ground wire. The location of the ground terminal on each unit is shown below.

> ⚠ **CAUTION**
>
> **Ground the equipment.**
>
> Ungrounded equipment can give off or receive electro-magnetic interference or cause electrical shock.

Display Unit

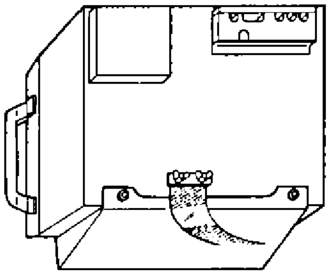

Power Unit

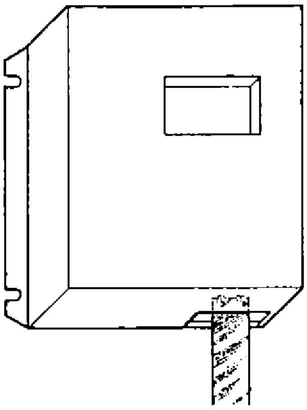

Transmitter Unit

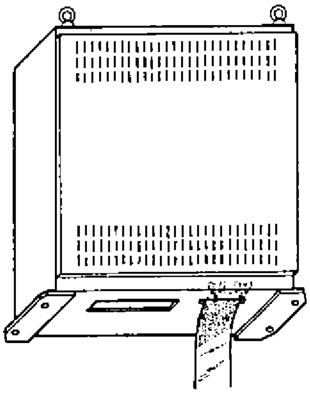

Receiver Unit

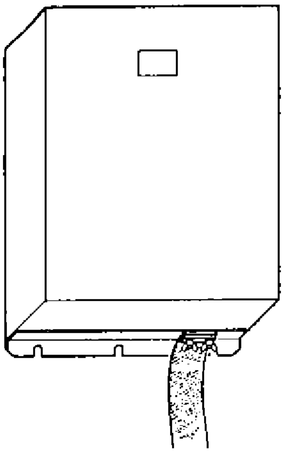

Interface Unit

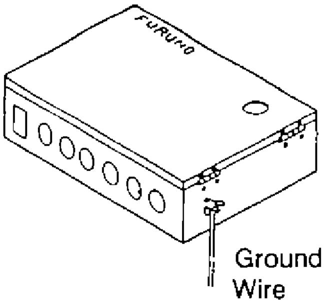

FNZ Joint Box

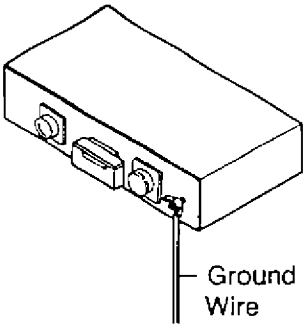

FURUNO

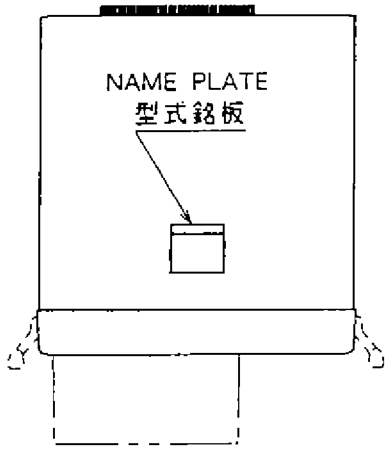

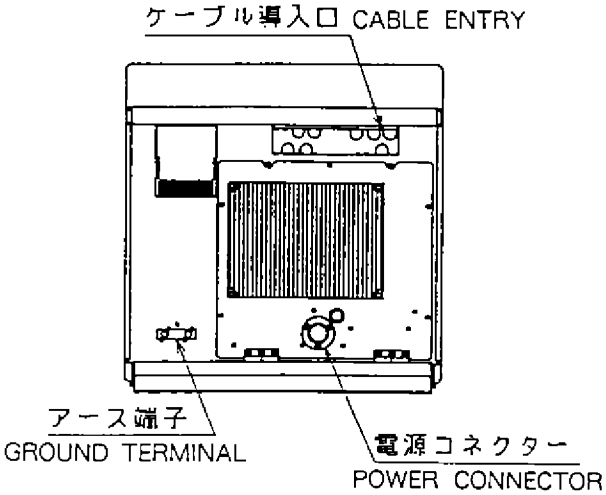

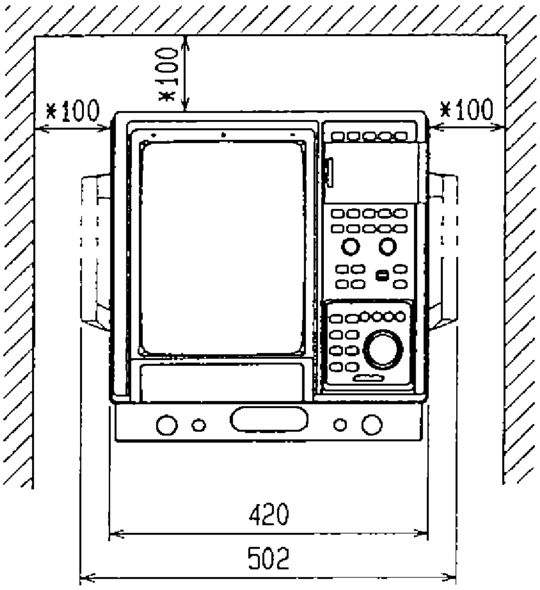

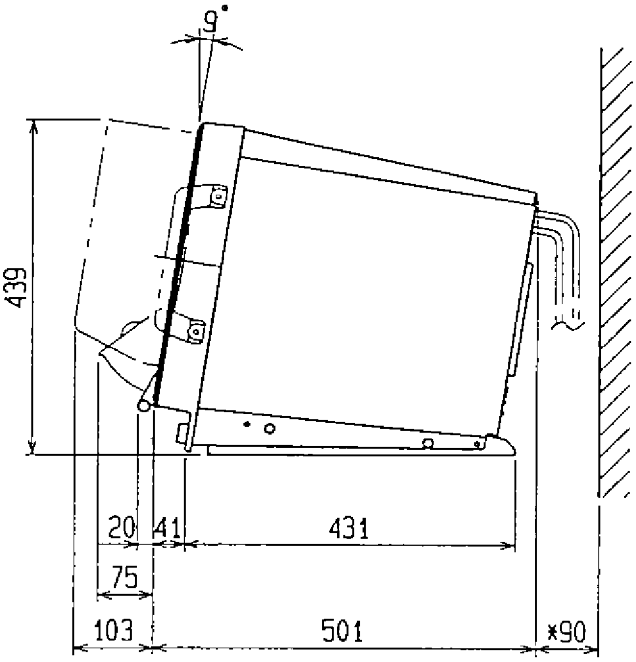

＊印寸法は最小サービス空間寸法とする。
MAINTENANCE SPACE

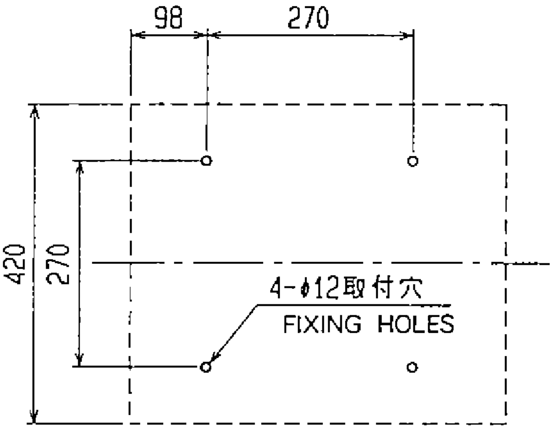

品番 ITEM	品名 NAME	材質 MATERIAL	数量 Q'TY	図番 DWG. NO.	摘要 REMARKS

承認 APPROVED	AUG・5・'92 T. NAKANO	三角法 THIRD ANGLE		名称 TITLE	CSH-210/711 210F CSH-216 指示器外寸図 DISPLAY UNIT 副指示器外寸図 SUB-DISPLAY UNIT
検図 CHECKED	AUG・5・'92 M. USUDA	尺度 SCALE	1/10		
製図 DRAWN	AUG・5・'92 T. MIYOSHI	質量 MASS	CSH-210/711 34kg CSH-216 33kg	図番 DWG.NO	C1286 - G01 - B

FURUNO ELECTRIC CO., LTD.

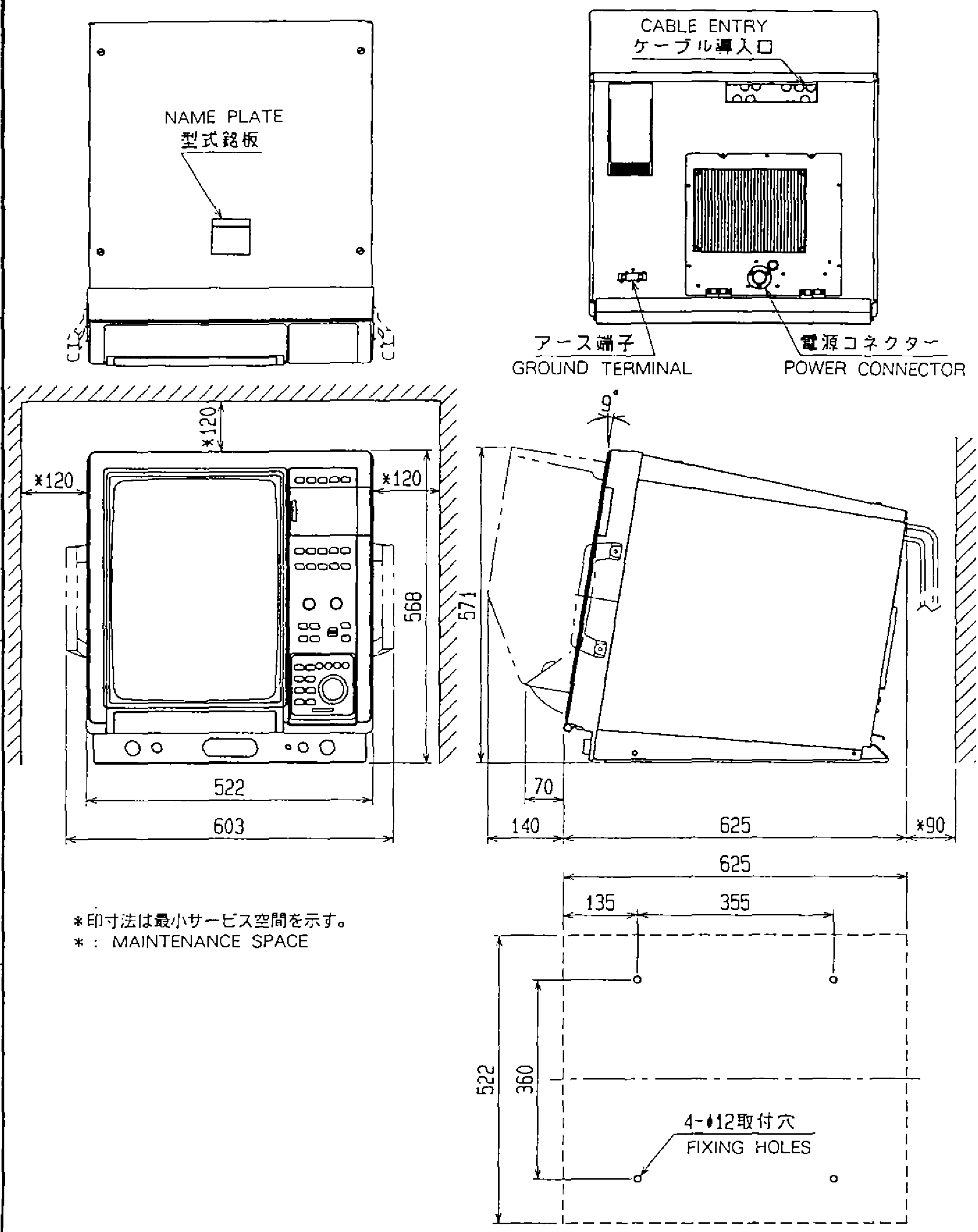

DRAWN JAN.12 '96 T. YAMASAKI			TYPE CSH-2200 CSH-2200F CSH-7200
CHECKED JAN.16 '96 TAKAHASHI	CSH-82		名称 指示器
APPROVED JAN 16 '96 K OTA	CSH-72 CSH-22		外寸図
SCALE 1/10 — MASS 65 kg	APPLICABLE TO: (MODEL)	BLOCK NO.	NAME DISPLAY UNIT
DWG NO. C1292-G01- C	10-054-1990- G1		OUTLINE DRAWING

注1）＊印は外足取付時の寸法　（取外し可）
2）他の機器や壁との間を 前方300MM その他は100MM 以上あけること

NOTE 1) ASTERISK '*' SHOWS OUTSIDE LEG(REMOVABLE) MOUNTING DIMENSIONS.
2) MINIMUM MAINTENANCE AND VENTILATION SPACE IS 300MM ON FRONT SIDE AND 100MM ON THE OTHER SIDES.

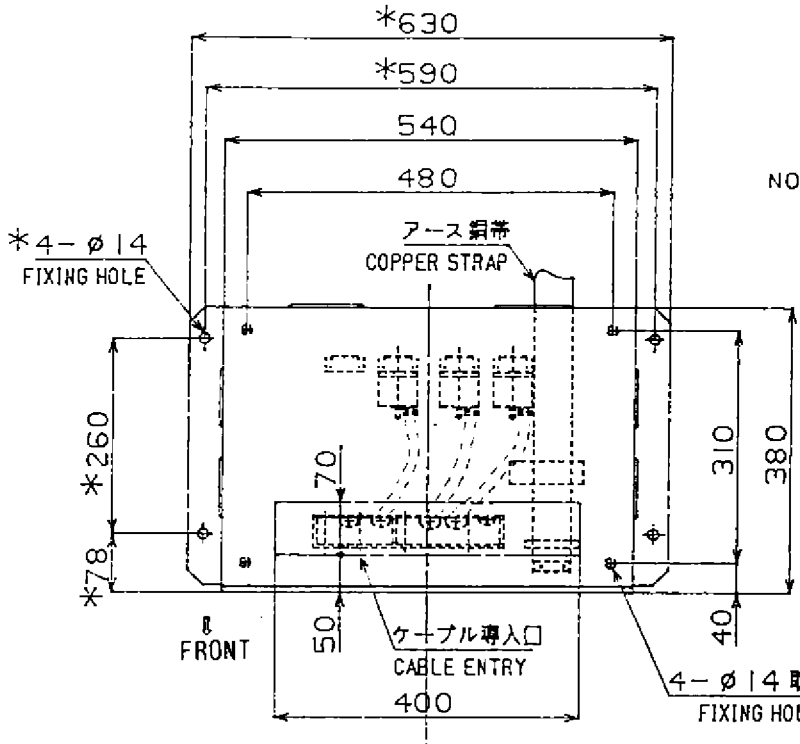

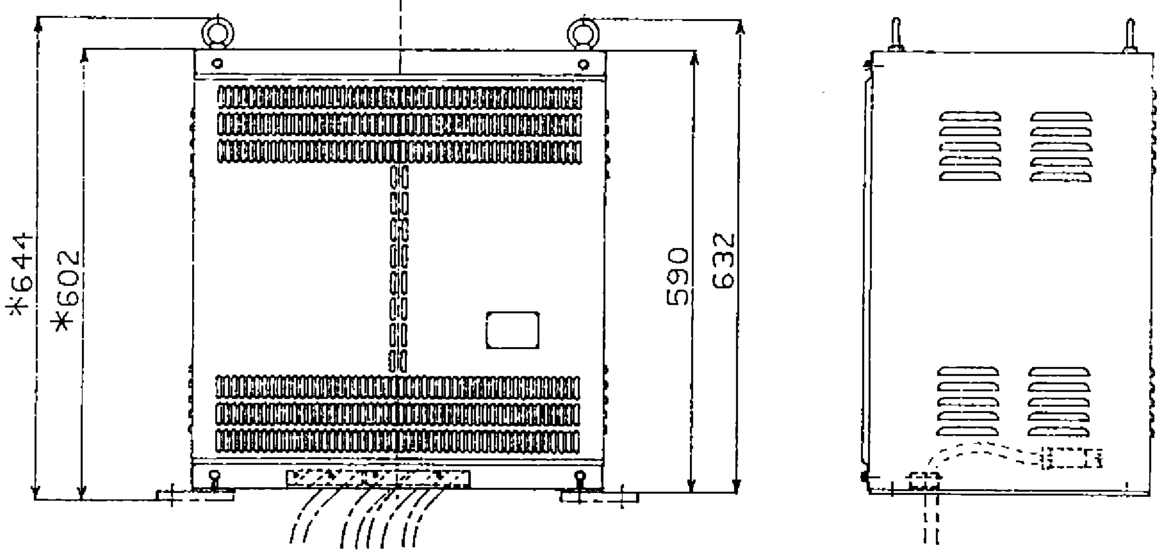

品番 ITEM	品名 NAME	材質 MATERIAL	数量 Q'TY	図番 DWG. NO.	摘要 REMARKS

承認 APPROVED	JUL. 10. '85	三角法 THIRD ANGLE PROJECTION	名称 TITLE: CSH-310/K CSH-810 送振装置 TRANSMITTER UNIT
検図 CHECKED		尺度 SCALE 1／10	
製図 DRAWN		重量 WEIGHT CSH-310:96kg CSH-810:82kg	図番 DWG. NO. C1257−018−E

FURUNO ELECTRIC CO., LTD.

注 1) ※印は外足取付時の寸法(取外し可)。
2) 他の機器や壁との間を前方300MM その他は100MM以上あけること。
3) 外足取付の場合は，両側面に取付ネジを締め付けるスペースが必要。

NOTE 1) ASTERISK "※" SHOWS OUTSIDE LEG (REMOVAL) MOUNTING DIMENSIONS.

2) MINIMUM MAINTENANCE AND VENTILATION SPACE IS 300MM ON FRONT SIDE AND 100MM ON THE OTHER SIDES.

3) FOR OUTSIDE LEG TYPE, ADDITIONAL SPACE IS REQUIRED ON RIGHT AND LEFT SIDES FOR INSTALLATION OF UNIT.

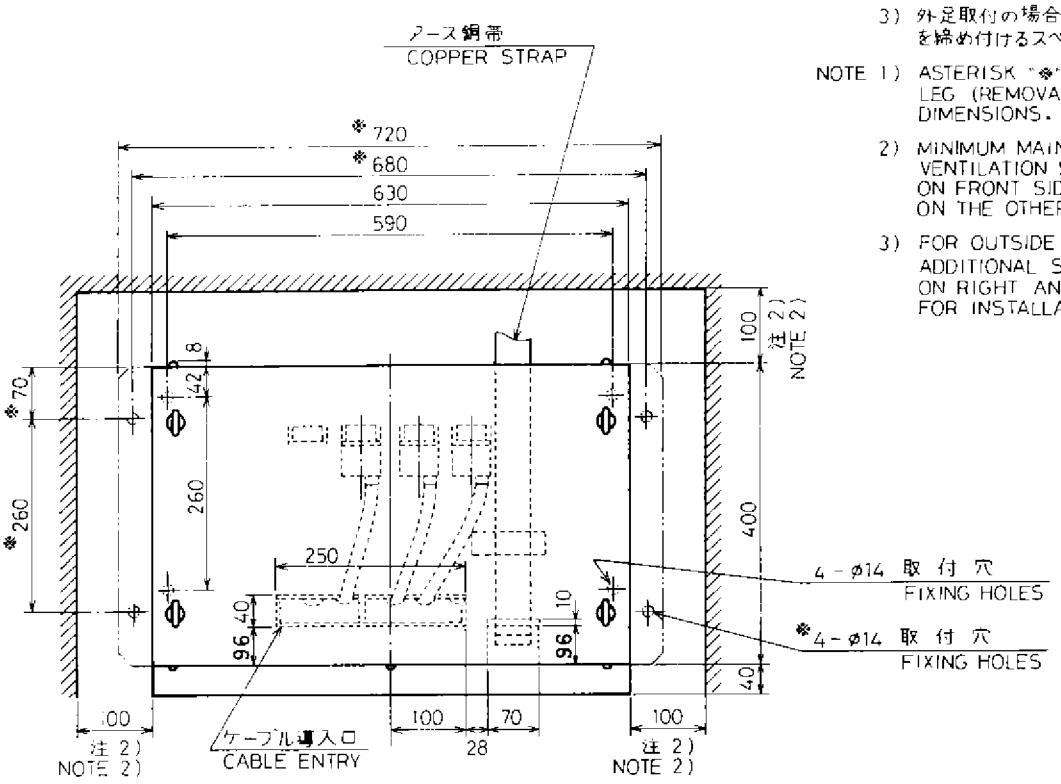

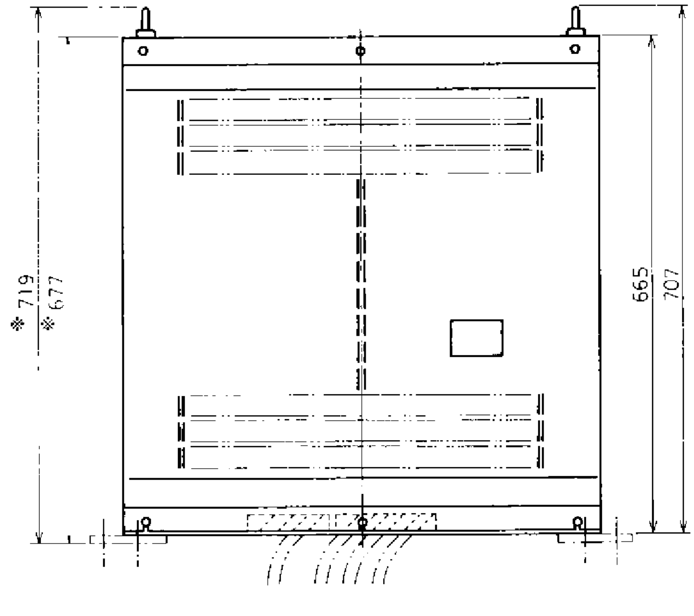

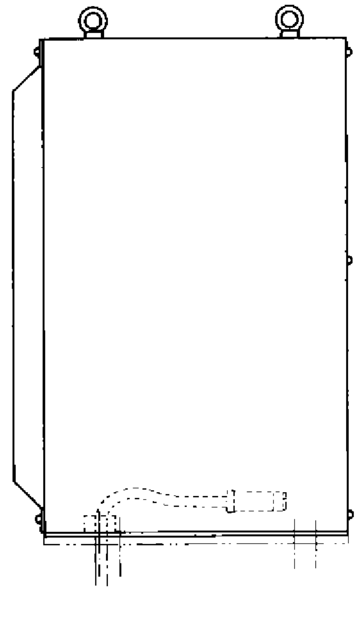

CSH-20F/20S

品番 ITEM	品名 NAME	材質 MATERIAL	数量 Q'TY	図番 DWG. NO.	摘要 REMARKS

承認 APPROVED	MAY. 19. '89	三角法 THIRD ANGLE PROJECTION	名称 TITLE: CSH-310S/FII 送振装置 TRANSMITTER UNIT
検図 CHECKED	MAY. 19. '89	尺度 SCALE: 1/10	
製図 DRAWN	MAY. 19. '89	重量 WEIGHT: 100 (内足) 110 (外足) kg	図番 DWG. NO.: C1272-G02-C

FURUNO ELECTRIC CO., LTD.

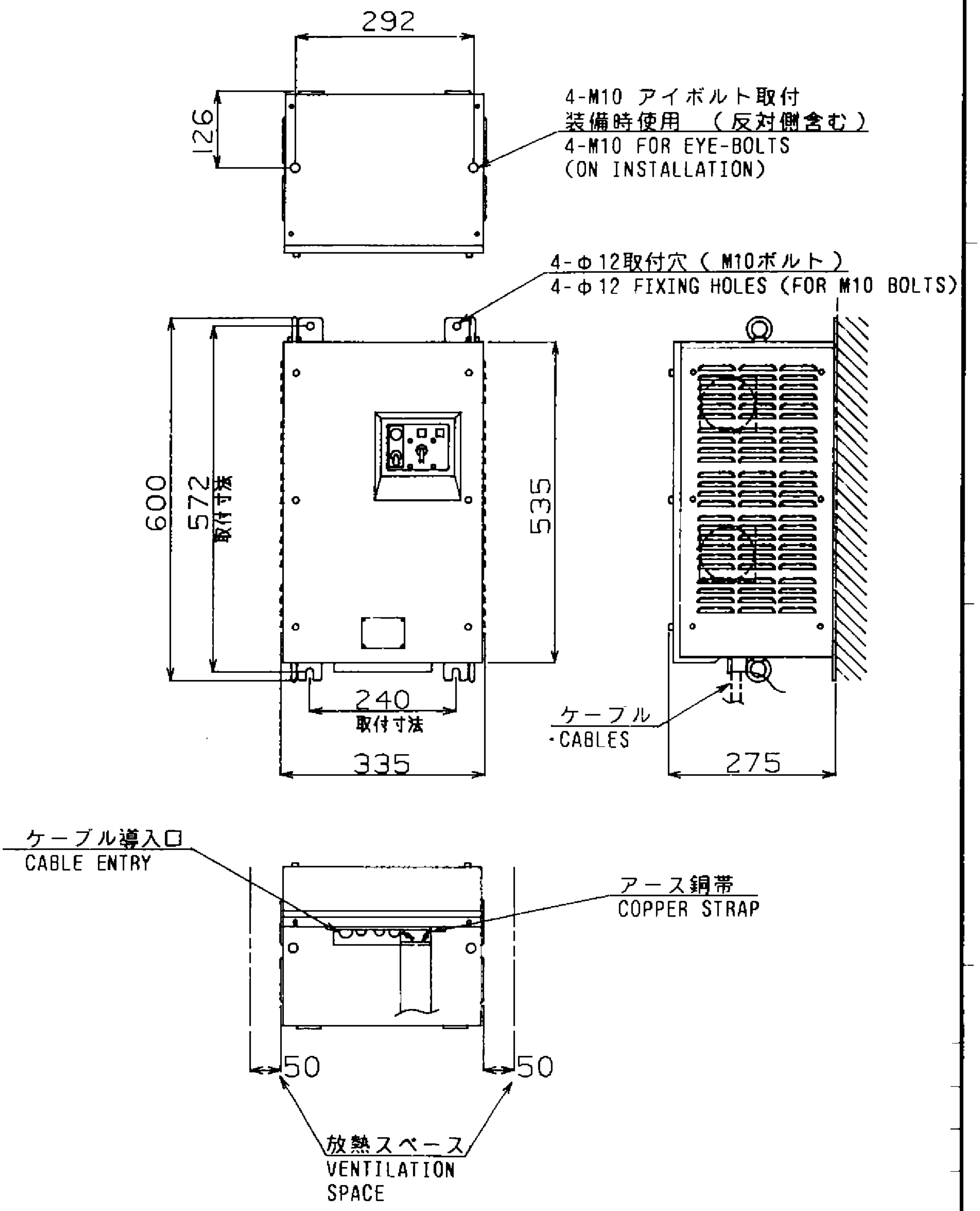

品番 ITEM	品名 NAME	材質 MATERIAL	数量 Q'TY	図番 DWG. NO.	摘要 REMARKS

承認 APPROVED	FEB. 28. '86	三角法 THIRD ANGLE PROJECTION	名称 TITLE CSH-380A/B CSH-380S 電源装置 POWER UNIT
検図 CHECKED	Feb. . . 'S6	尺度 SCALE 1/10	
製図 DRAWN	61・2・25 Y.KOBAYASHI	重量 WEIGHT 56 kg	図番 DWG. NO. C1257-065-C

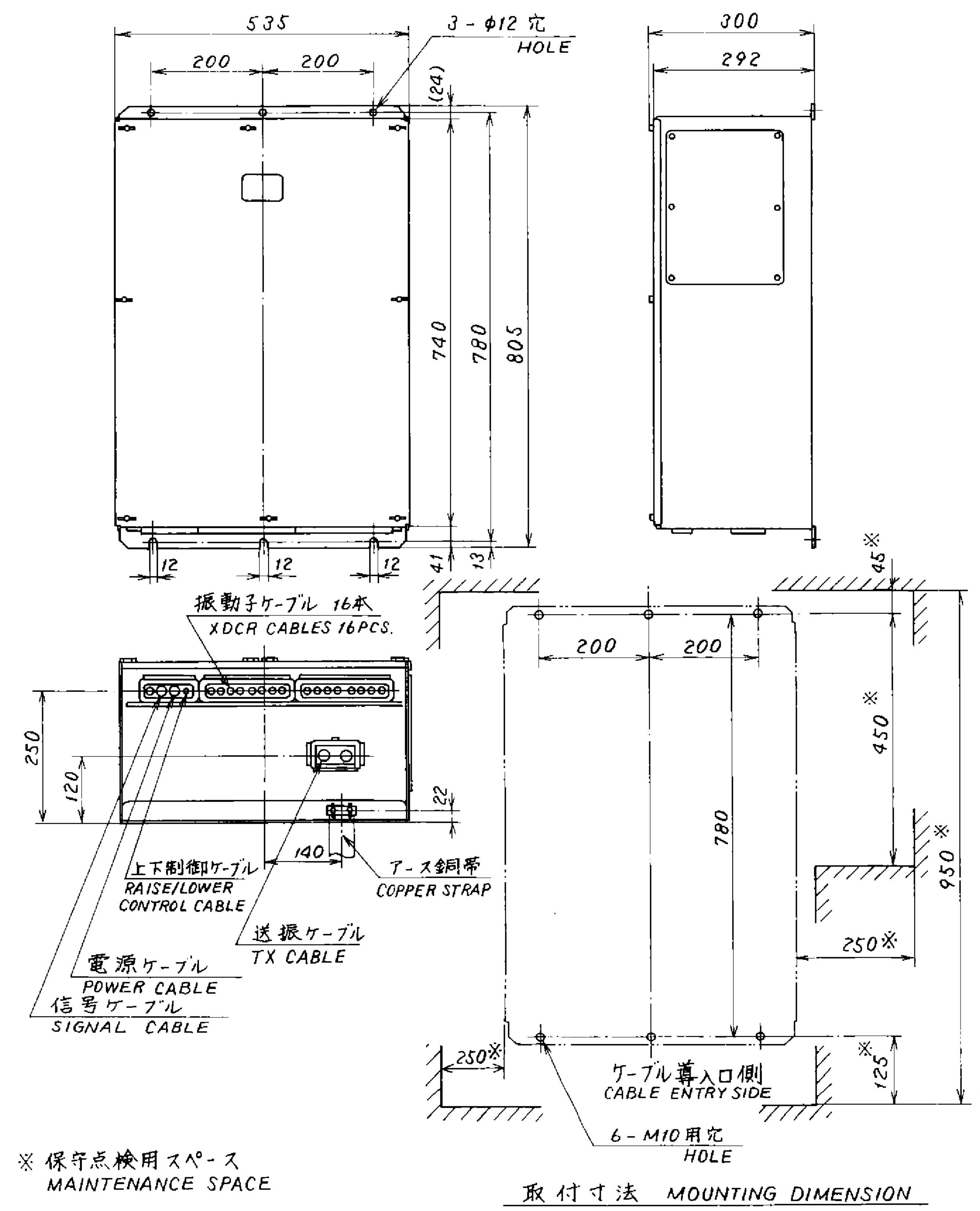

品番 ITEM	品名 NAME	材質 MATERIAL	数量 Q'TY	図番 DWG. NO.	摘要 REMARKS

承認 APPROVED JAN. 14. '85	三角法 THIRD ANGLE PROJECTION	名称 TITLE	CSH-220/K/FII 受信装置外寸図 CSH-220S RECEIVER UNIT
検図 CHECKED	尺度 SCALE	1/10	
製図 DRAWN	重量 WEIGHT	47 kg	図番 DWG. NO. C1257-013-D

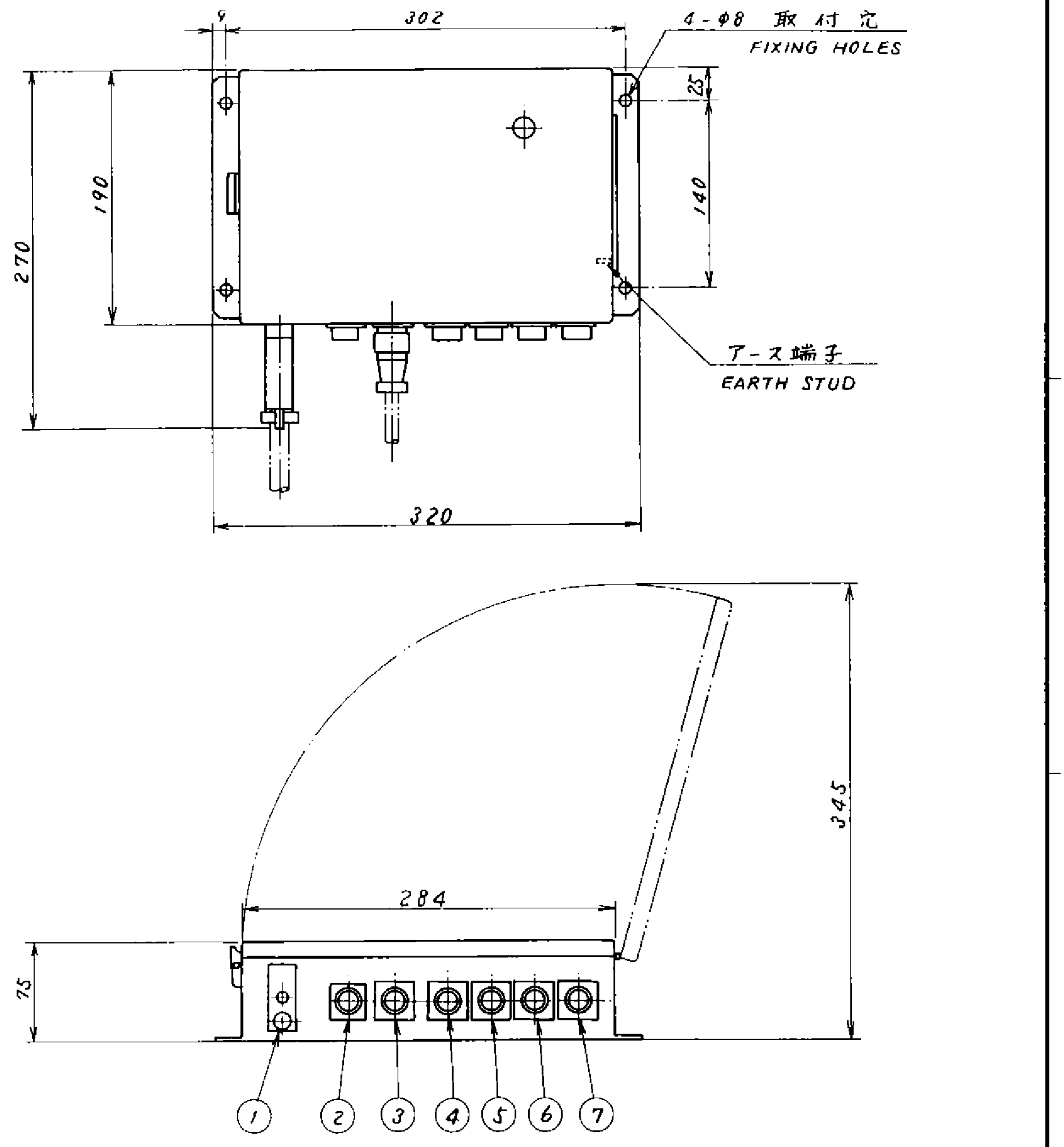

品番 ITEM	名称 NAME		
7	魚探レセプタクル	RECEPTACLE	FOR ECHO SOUNDER
6	潮流計 〃	〃	FOR DOPPLER SONAR CURRENT INDICATOR
5	航法装置 〃	〃	FOR NAVIGATION SYSTEM
4	ジャイロ 〃	〃	FOR GYRO COMPASS
3	ネットゾンデ 〃	〃	FOR NET ZONDE
2	ログ 〃	〃	FOR SPEED LOG
1	カラー魚探ディスプレイ指示器レセプタクル	〃	FOR COLOR SCANNING SONAR DISPLAY

承認 APPROVED		三角法 THIRD ANGLE PROJECTION	名称 TITLE: CS-120A 外部インターフェース INTERFACE UNIT
検図 CHECKED	Nov. 7 '80	尺度 SCALE	
製図 DRAWN		重量 WEIGHT 3 kg	図番 DWG. NO. C1233-005-D

FURUNO ELECTRIC CO., LTD.

範囲 DIMENSIONS	公差 TOL.
L≤50	±1mm
50<L≤100	±2mm
100<L≤500	±3mm
500<L≤1000	±4mm

表1 TABLE 1

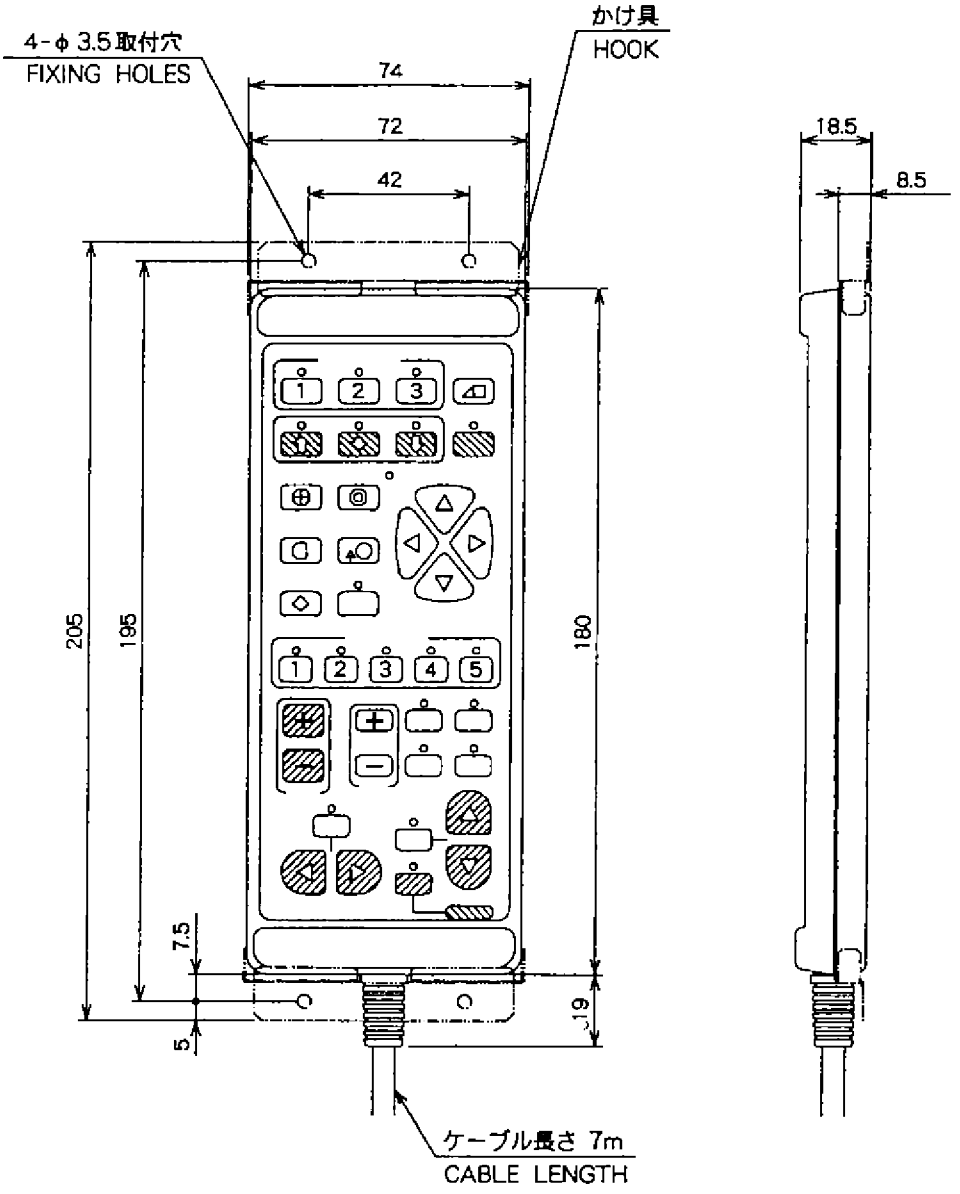

注記
1）指定なき公差寸法は表1による。
NOTE
1. TABLE 1 INDICATES TOLERANCE OF DIMENSIONS.

DRAWN	Jun. 20 '97 J. YAMASAKI		TITLE	CSH-116/135
CHECKED	June 20 '97 K. Kusunoki	CSH-23/23F	名称	リモート箱
APPROVED	June 20 '97 [illegible]	CSH-53/83/73 CSH-21/22		外寸図
SCALE 1/2	MASS 1.5 kg		NAME	REMOTE CONTROL BOX
DWGNo. C1286-G02-B				OUTLINE DRAWING

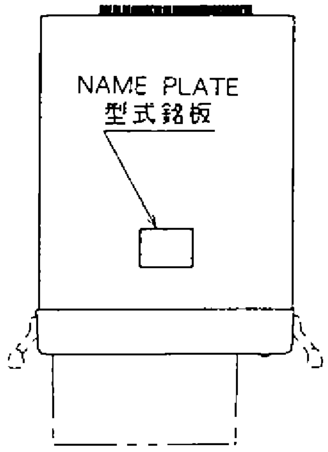

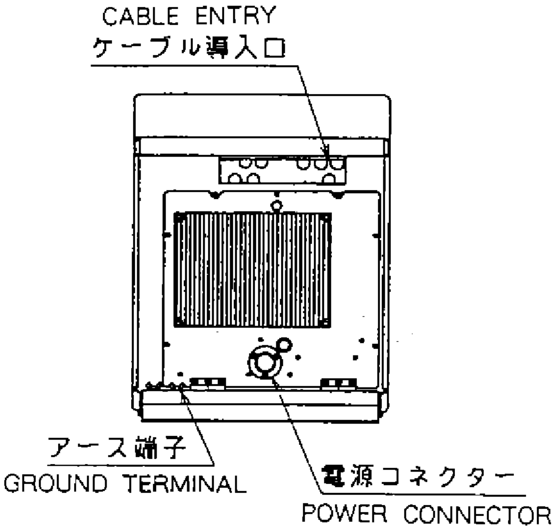

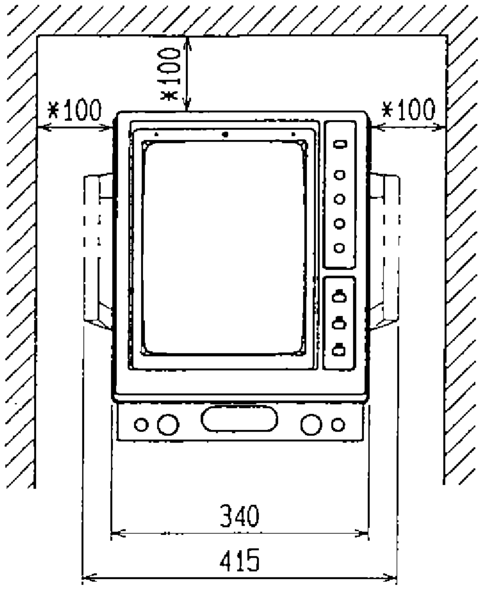

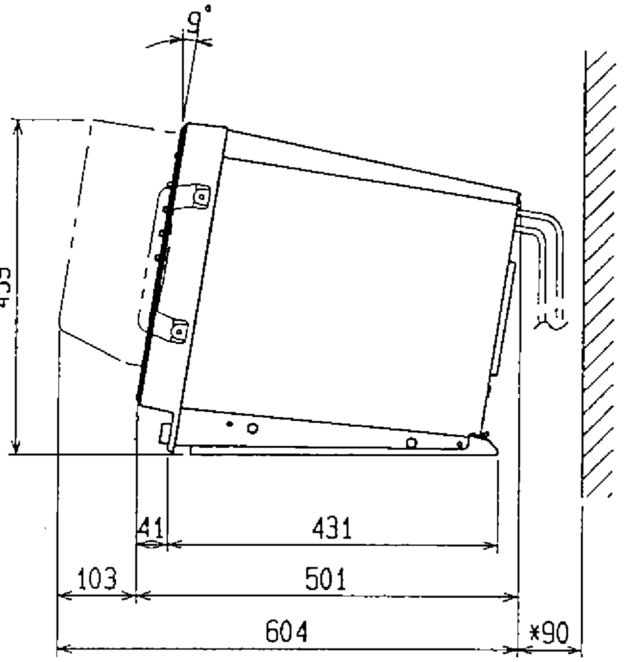

*印寸法は最小サービス空間寸法とする。
MAINTENANCE SPACE

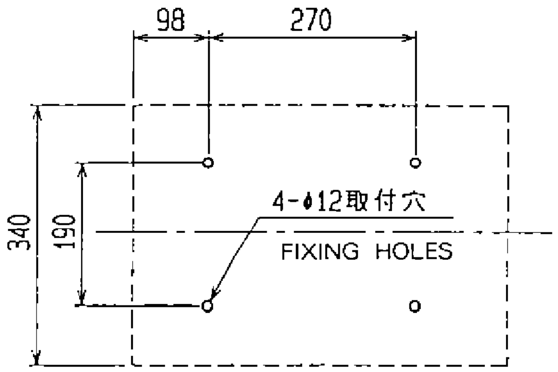

品番 ITEM	品名 NAME	材質 MATERIAL	数量 Q'TY	図番 DWG. NO.	摘要 REMARKS

承認 APPROVED	AUG・5・'92 T. NAKANO	三角法 THIRD ANGLE		名称 TITLE CSH-106 リモートディスプレイ外寸図 REMOTE DISPLAY UNIT
検図 CHECKED	AUG・5・'92 M. USUDA	尺度 SCALE	1/10	
製図 DRAWN	AUG・5・'92 T. MIYOSHI	質量 MASS	25 kg	図番 DWG.NO C1286 - G03 - B

FURUNO ELECTRIC CO., LTD.

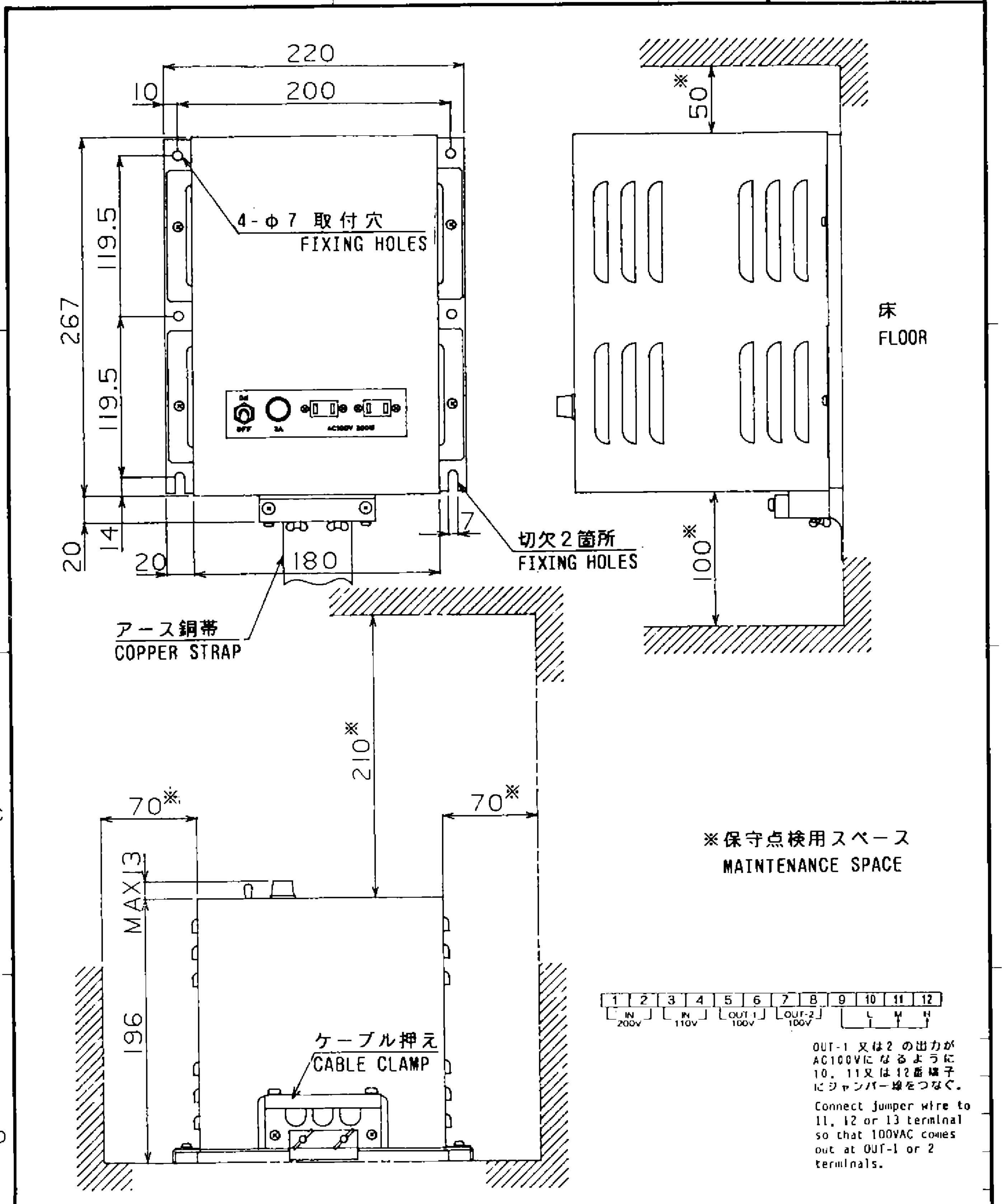

CSH シリーズ

品番 ITEM	品名 NAME	材質 MATERIAL	数量 Q'TY	図番 DWG NO.	摘要 REMARKS

承認 APPROVED		三角法 THIRD ANGLE PROJECTION	名称 TITLE PT-400 電源変圧器 STEP-DOWN TRANSFORMER
検図 CHECKED		尺度 SCALE 1/4	
製図 DRAWN		重量 WEIGHT 22 kg	図番 DWG NO. C0005-002-B

FURUNO ELECTRIC CO., LTD.

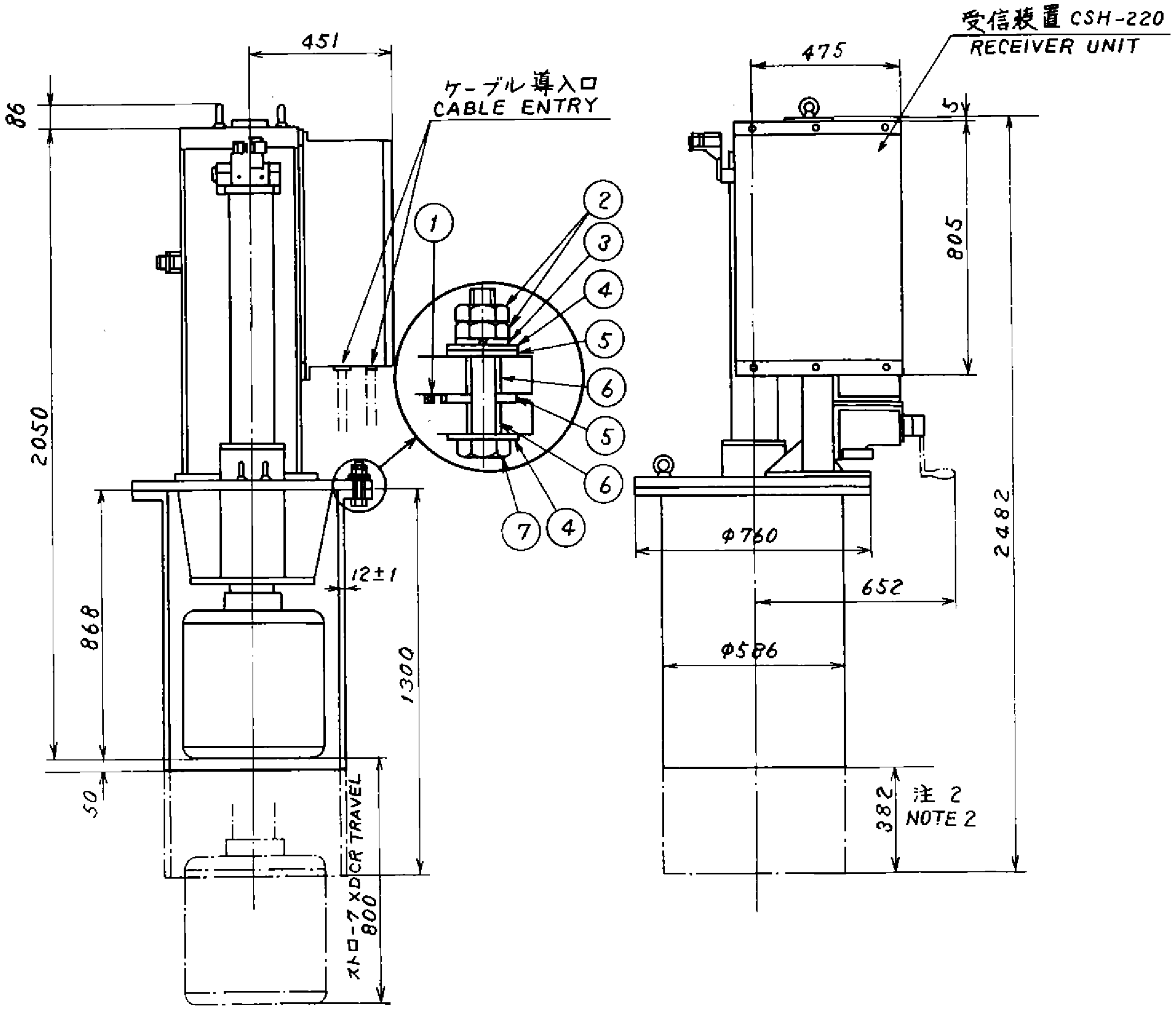

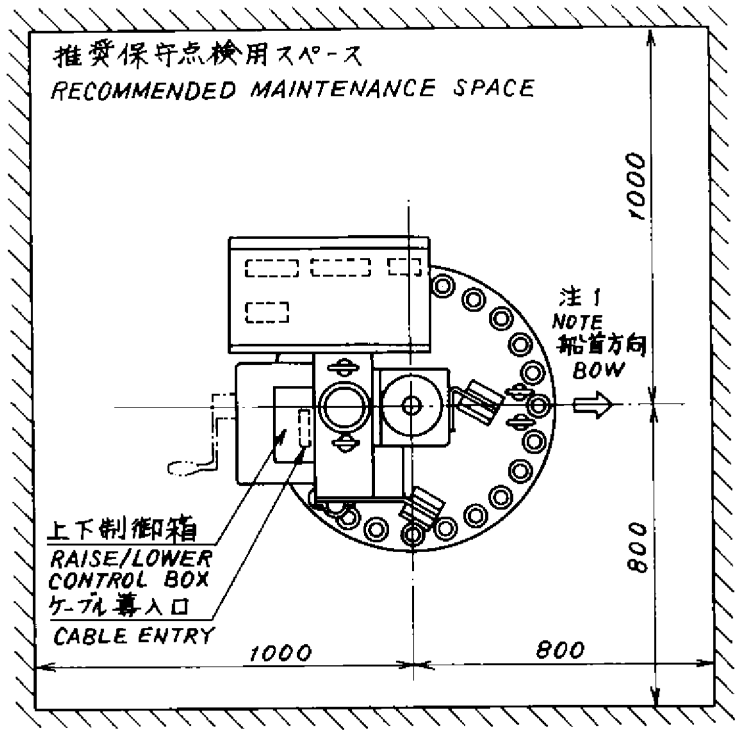

注 1. 架台フランジ上の矢印 ⇨ を船首方向に一致させることが出来ない時は指示装置内で船首線を調整のこと。
2. 装備位置に応じて382mm以内で切断のこと。

NOTE 1. HEADING ADJUSTMENT IS NEEDED IN DISPLAY UNIT IF THE ARROW ⇨ ON GALLOWS FLANGE DOES NOT FACE SHIP'S BOW.
2. CUT THE TANK WITHIN 382MM IN LENGTH ACCORDING TO INSTALLATION SITE.

品番 ITEM	品名 NAME	材質 MATERIAL	数量 Q'TY	図番 DWG. NO.	摘要 REMARKS
7	六角ボルト HEX. BOLT	SUS304	13	M20×120	
6	絶縁パッキン(2) INSULATION PACKING(2)		37	MS-1000-68	
5	絶縁パッキン(1) INSULATION PACKING(1)		48	MS-1000-67	
4	平座金 FLAT WASHER	SUS304	37	MS-1000-69	
3	バネ座金 SPRING WASHER	SUS304	24	FOR M20	
2	六角ナット HEX. NUT	SUS304	48	M20	
1	O リング O-RING		1	JISB2401 V585	

承認 APPROVED	[signature]	三角法 THIRD ANGLE PROJECTION		名称 TITLE	上下装置外寸図 HULL UNIT
検図 CHECKED	[signature]	尺度 SCALE	1/20	CSH-3080 CSH-21080	(ストローク XDCR TRAVEL 800mm)
製図 DRAWN	[signature]	重量 WEIGHT	970 kg	図番 DWG. NO.	C1257-014-E

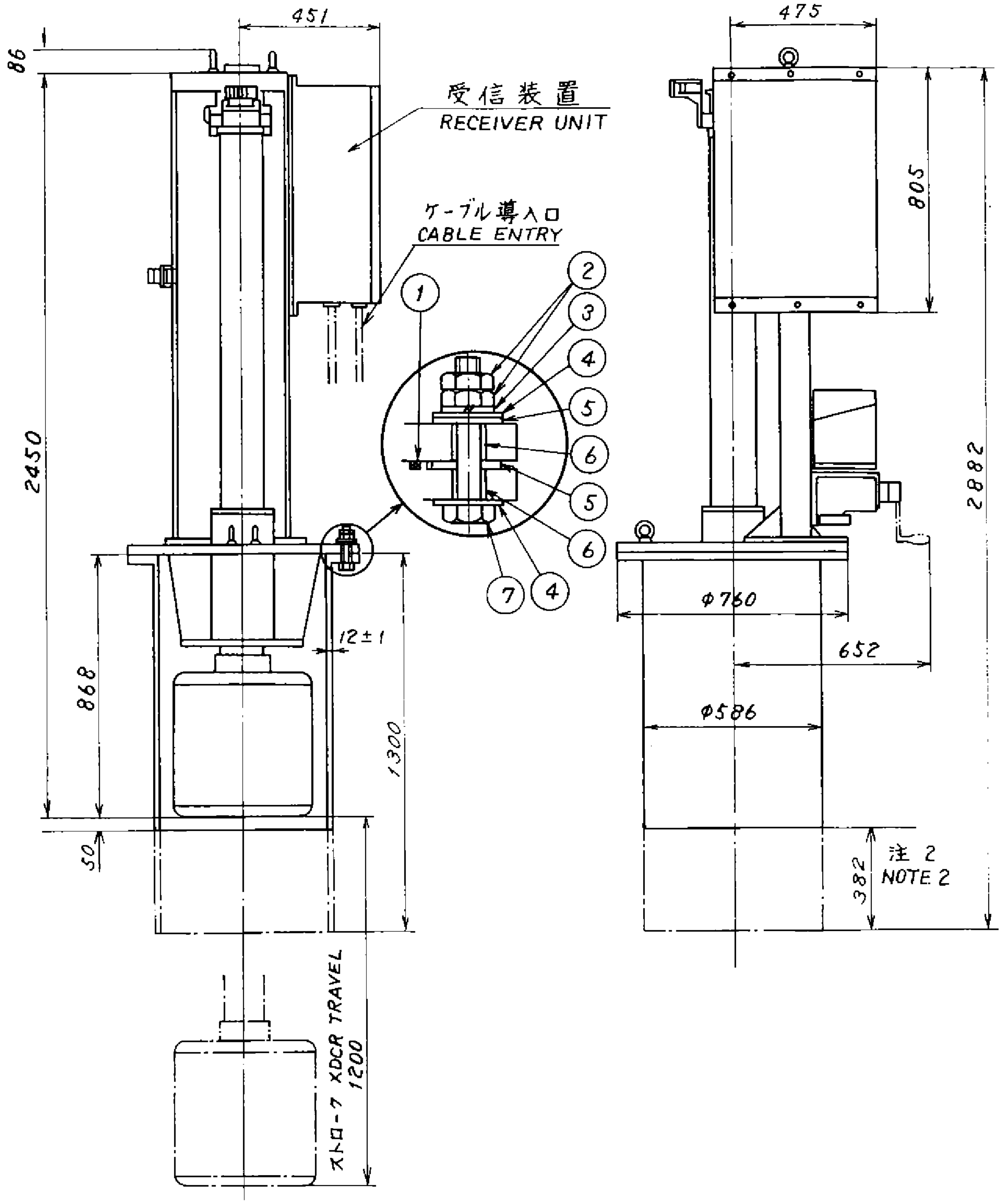

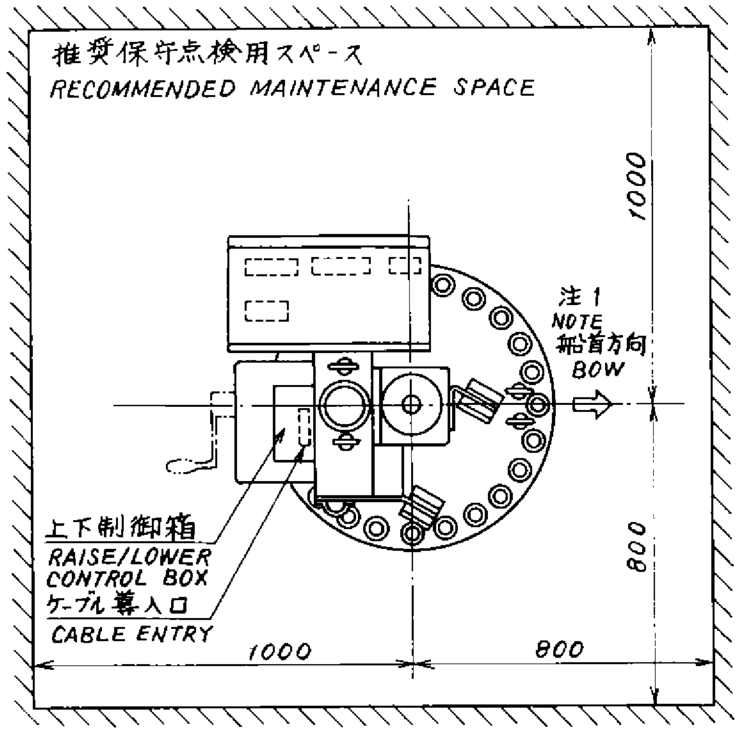

注 1. 架台フランジ上の矢印 ⇨ を船首方向に一致させることが出来ない時は指示装置内で船首線を調整のこと。
2. 装備位置に応じて382mm以内で切断のこと。

NOTE 1. HEADING ADJUSTMENT IS NEEDED IN DISPLAY UNIT IF THE ARROW ⇨ ON GALLOWS FLANGE DOES NOT FACE SHIP'S BOW.
2. CUT THE TANK WITHIN 382 MM IN LENGTH ACCORDING TO INSTALLATION SITE.

品番 ITEM	品名 NAME	材質 MATERIAL	数量 Q TY	図番 DWG. NO.	摘要 REMARKS
7	六角ボルト HEX. BOLT	SUS304	13	M20×120	
6	絶縁パッキン(2) INSULATION PACKING(2)		37	MS-1000-68	
5	絶縁パッキン(1) INSULATION PACKING(1)		48	MS-1000-67	
4	平座金 FLAT WASHER	SUS304	37	MS-1000-69	
3	バネ座金 SPRING WASHER	SUS304	24	FOR M20	
2	六角ナット HEX. NUT	SUS304	48	M20	
1	Oリング O-RING		1	JIS B2401 V585	

承認 APPROVED		三角法 THIRD ANGLE PROJECTION	名称 TITLE 上下装置外寸図 / CSH-3120 HULL UNIT / CSH-21120 (ストローク XDCR TRAVEL 1200mm)
検図 CHECKED		尺度 SCALE 1/20	
製図 DRAWN		重量 WEIGHT 1120 kg	図番 DWG. NO. C1257-015-F

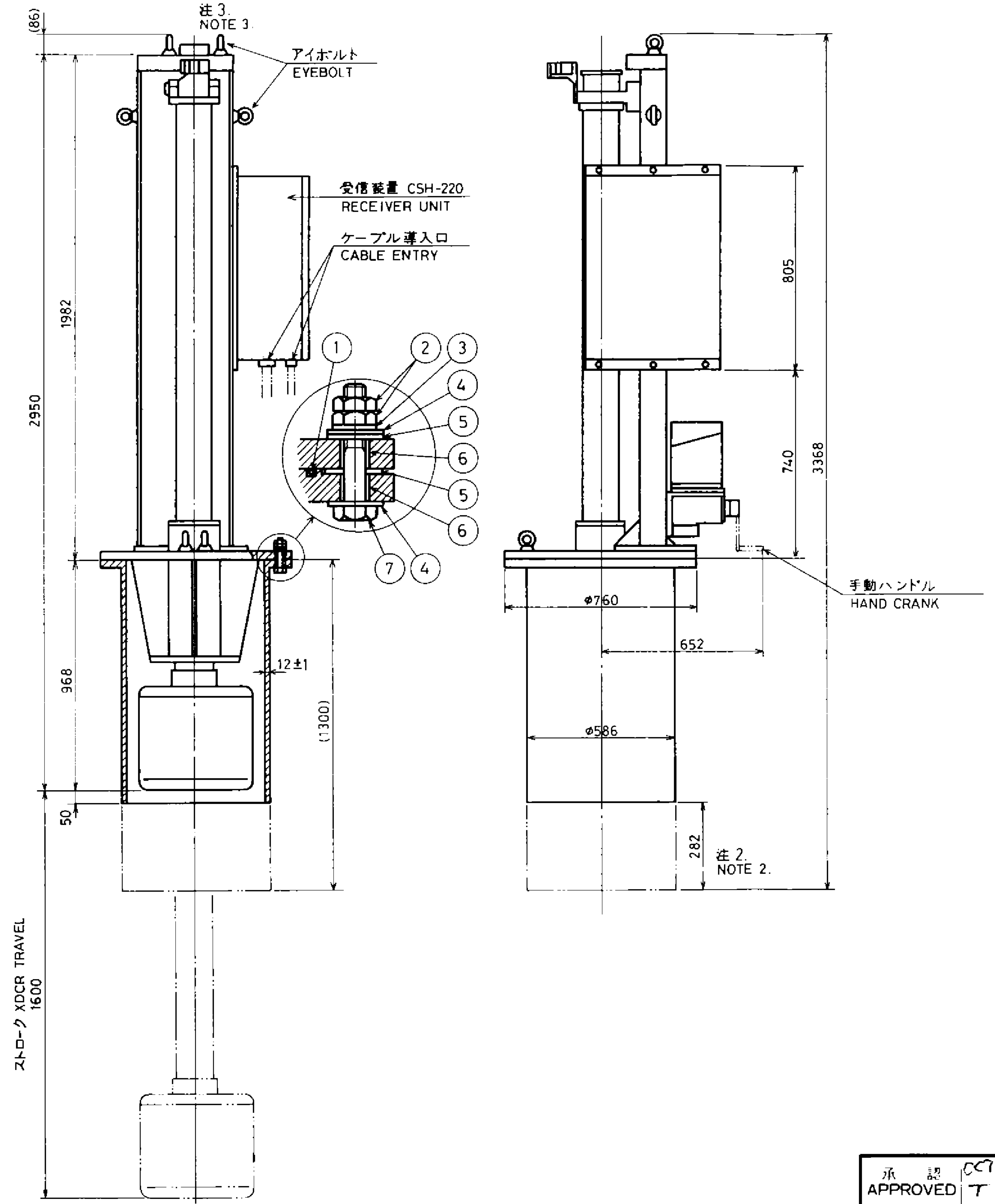

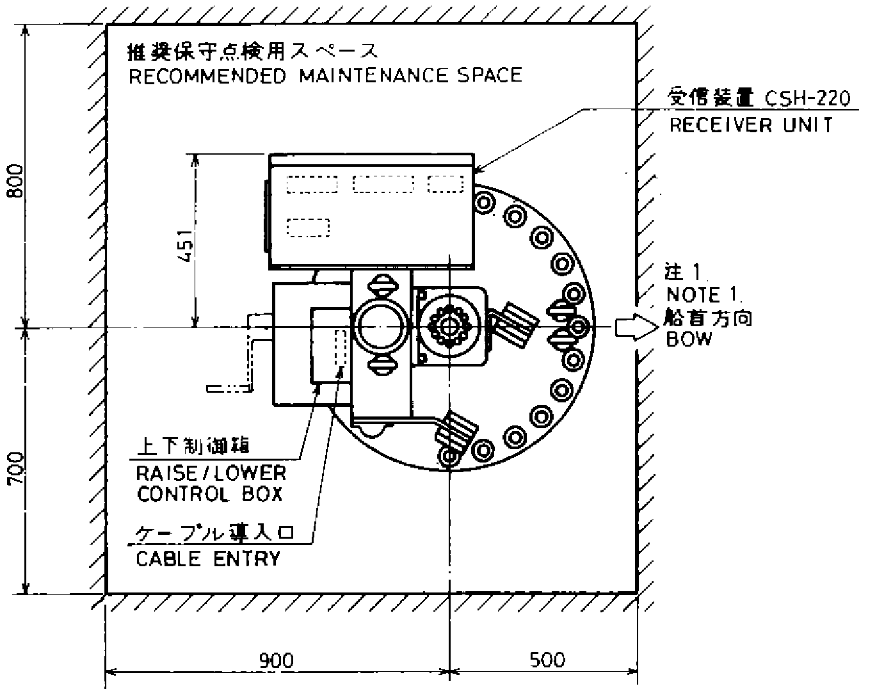

注 1 架台フランジ上の矢印⇨を船首方向に一致させることが出来ない時は指示装置内で船首線を調整のこと。
2 装備位置に応じて282mm以内で切断のこと。
3 架台最上部には アイボルトを利用して必ず防振用のステーを張ること。

NOTE 1. HEADING ADJUSTMENT IS NEEDED IN DISPLAY UNIT IF THE ARROW⇨ ON GALLOWS FLANGE DOES NOT FACE SHIP'S BOW.
2. CUT THE TANK WITHIN 282MM IN LENGTH ACCORDING TO INSTALLATION SITE.
3. UTILIZING EYE-NUTS ON TOP OF UNIT, EXTEND REINFORCEMENT STAYS TO SHIP'S HULL TO MINIMIZE VIBRATION OF UNIT.

品番 ITEM	品名 NAME	材質 MATERIAL	数量 Q TY	図番 DWG.NO.	備考 REMARKS
7	六角ボルト HEX.BOLT	SUS304	13	M20×120	
6	絶縁パッキン(2) INSULATION PACKING(2)	ファビリカ	37	MS-1000-68	
5	絶縁パッキン(1) INSULATION PACKING(1)	ファビリカ	48	MS-1000-67	
4	平座金 FLAT WASHER	SUS304	37	MS-1000-69	
3	バネ座金 SPRING WASHER	SUS304	24	FOR M20	
2	六角ナット HEX.NUT	SUS304	48	M20	
1	O-リング O-RING		1	JIS B 2401 V585	

承認 APPROVED	OCT. 2. '86 T. NAKANO	三角法 THIRD ANGLE PROJECTION	名称 TITLE CSH-3160 CSH-21160 — 上下装置外寸図 HULL UNIT (ストローク XDCR TRAVEL 1600mm)
検図 CHECKED		尺度 SCALE 1/20	
製図 DRAWN		重量 WEIGHT 1180kg	図番 DWG.NO. C1257-080-C

CHAPTER 2.
WIRING OF SONAR SECTION

Make the wirings in the sonar section, referring to the following drawings.

Name	Page
Connector/Terminal Board Location Drawing	2-3
Interconnection Diagram	2-4
Cable Fabrication/Connector Assembling Procedure	2-5 to 2-8
Transducer Cable Connection	2-9

2.1. List of Cables

Wire Symbol	Name
○	Vinyl Sheath Wire
O	Shielded Wire
⬭	Twisted Pair Wire

10S1258

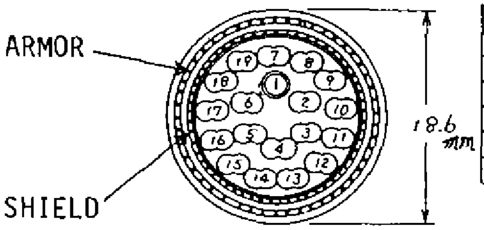

NO.	COLOR	NO.	COLOR	NO.	COLOR
2	BLK/BRN	8	BLK/PPL	14	BRN/GRN
3	BLK/RED	9	BLK/GRY	15	BRN/BLU
4	BLK/ORG	10	BLK/WHT	16	BRN/PPL
5	BLK/YEL	11	BRN/RED	17	BRN/GRY
6	BLK/GRN	12	BRN/ORG	18	BRN/WHT
7	BLK/BLU	13	BRN/YEL	19	RED/ORG

10S1259-1

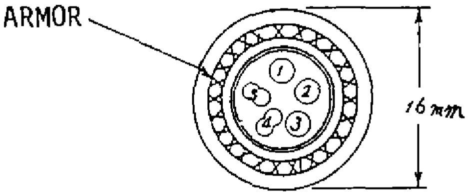

NO.	COLOR
1	BLK
2	WHT
3	RED
4	BRN/BLK
5	WHT/RED

10S1260

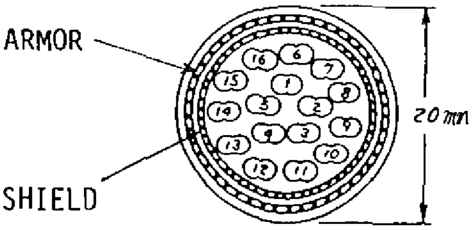

NO.	COLOR	NO.	COLOR	NO.	COLOR
1	YEL/BLK	7	RED/WHT	13	YEL/PPL
2	BLU/BLK	8	GRN/WHT	14	BLU/PPL
3	RED/BLK	9	YEL/GRY	15	RED/PPL
4	GRN/BLK	10	BLU/GRY	16	GRN/PPL
5	YEL/WHT	11	RED/GRY		
6	BLU/WHT	12	GRN/GRY		

10S1261

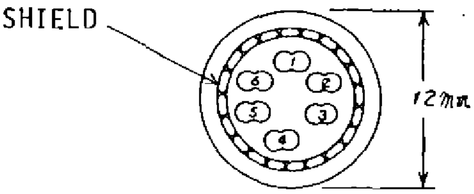

NO.	COLOR	NO.	COLOR
1	BRN/BLK	5	GRN/BLK
2	RED/BLK	6	BLU/BLK
3	ORG/BLK		
4	YEL/BLK		

2.2. Crimping Tool and Crimping Method

A special crimping tool is necessary for connection of wires to the contact pins of 38P connector 00-8016-038-000-751 and the 20P connector 00-8016-020-000-703. Also a pin extractor should be used to remove the contact pin from the connector body. The following describes how to crimp and extract the contact pin.

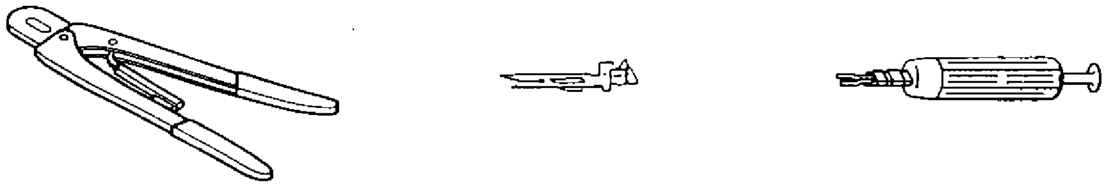

2.2.1. Wire Crimping Procedure

1) Strip the vinyl sheath of the wire to expose the core by 3.2mm thru 4mm.

2) Hold the crimping tool horizontally and insert the contact pin with its slit faced downward into the crimp hole on the crimping tool.

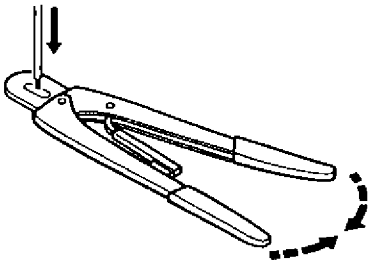

3) Insert the wire onto the contact pin and squeeze the handle until the ratchet releases. Note that the wire should be placed deep enough into the contact pin so that its end comes in contact with the stopper plate of the crimping tool. With crimping completed, pull the wire to make sure that it does not come off the contact pin.

2.2.2. Procedure to Extract Contact Pin

When a contact pin is inserted into an incorrect hole on the connector body, remove it by using the pin extractor.

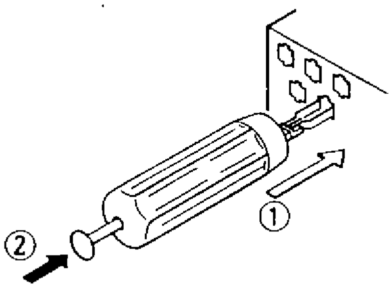

1) Push the pin extractor into the pin hole from the side opposite to the pin inserting side.

2) Push in the head of the pin extractor, and the retaining spring comes free and the contact pin can be removed.

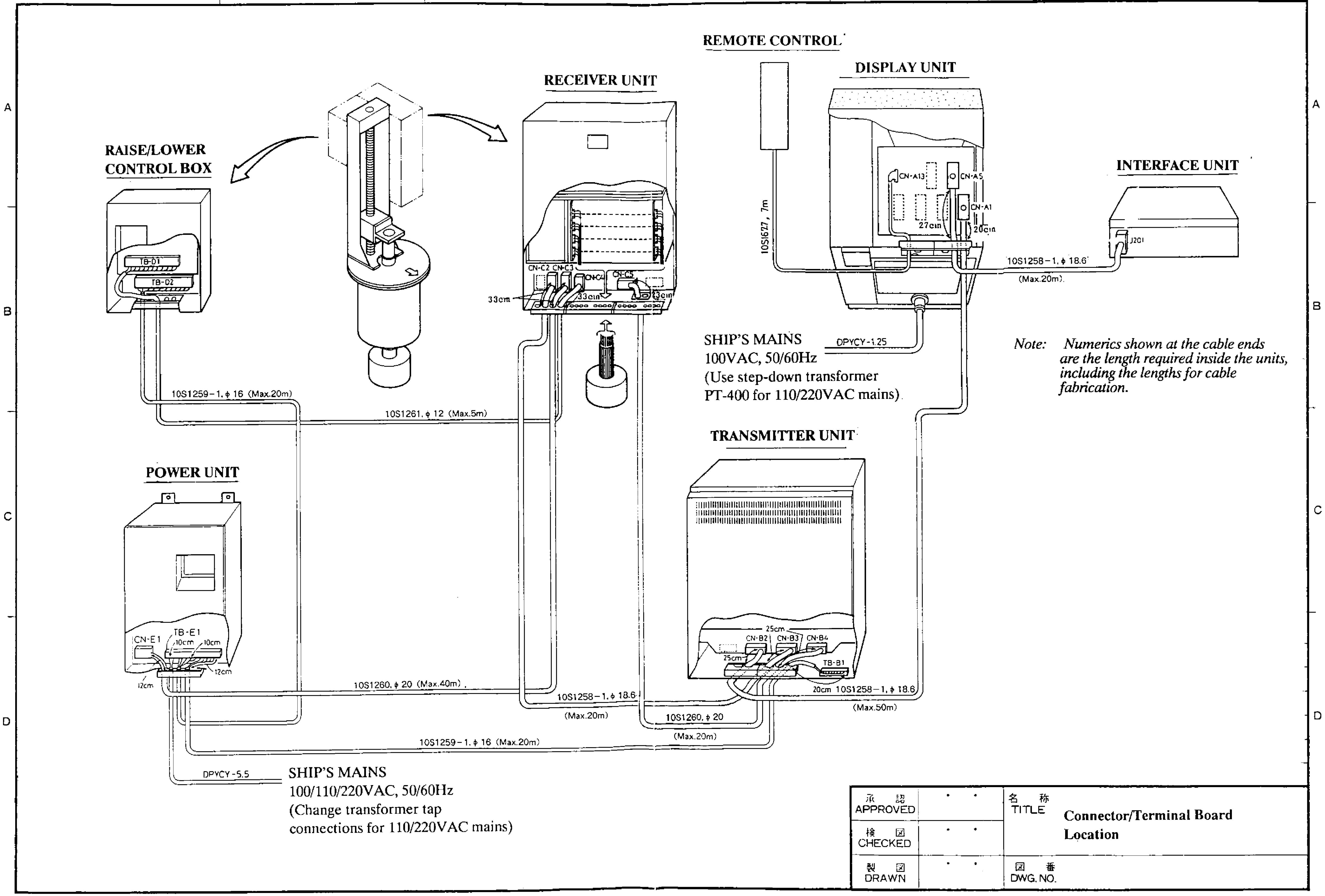

承認 APPROVED	. .	名称 TITLE	**Connector/Terminal Board Location**
検図 CHECKED	. .		
製図 DRAWN	. .	図番 DWG. NO.	

FURUNO

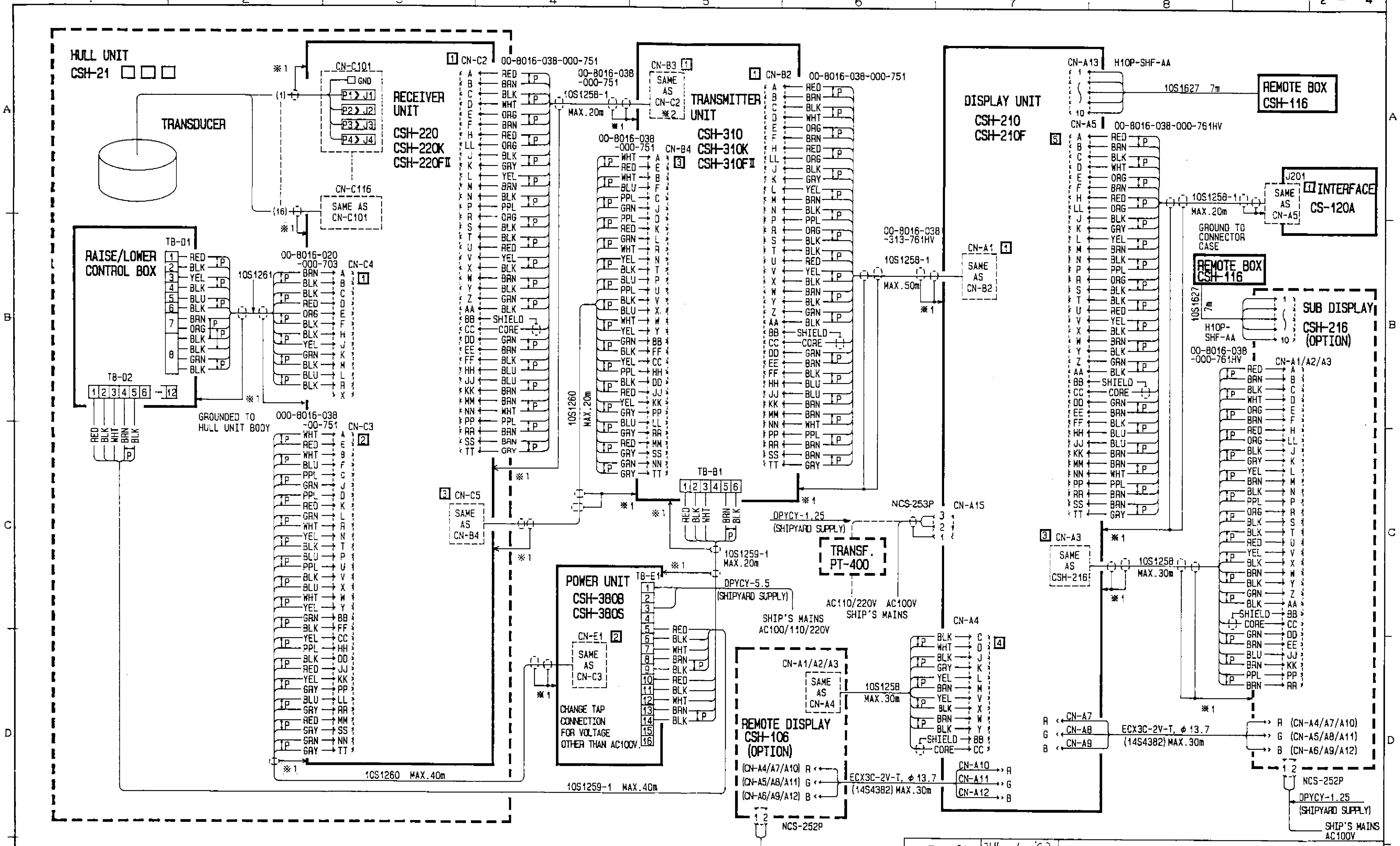

NOTE

1. ※1. GROUNDED THRU CABLE CLAMP.
2. NUMERAL IN □ SHOWS POSITION OF CONNECTOR GUIDE PIN (LARGE) GUIDE PIN (SMALL) IS SET ALWAYS TO POSITION "1".
3. ※2. CONNECT SHIELD TO CABLE GLAND INSTEAD OF "TT".

承認 APPROVED	JUL. 1 .'92 T.NAKANO	名称 TITLE	CSH-21/21F/21K/22/22F INTERCONNECTION DIAGRAM
検図 CHECKED	JUL. 1 .'92 T.MIYOSHI		
製図 DRAWN	JUL. 1 .'92 M.USUDA	図番 DWG. NO.	E1286-C01-D

FURUNO ELECTRIC CO., LTD.

38P Connector (00-8016-038-000-761HV)	CN-A1, CN-A5, J201

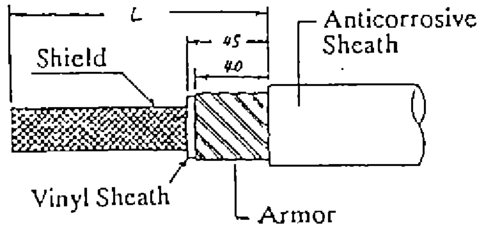

L= 250 (CN-A1)
320 (CN-A5)
170 (J201)

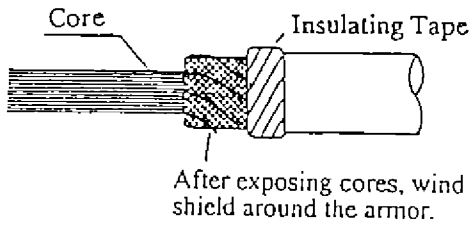

Assembling Connector

Shorten the an unused wires appropriately and treat their ends with vinyl tape to prevent short circuit.

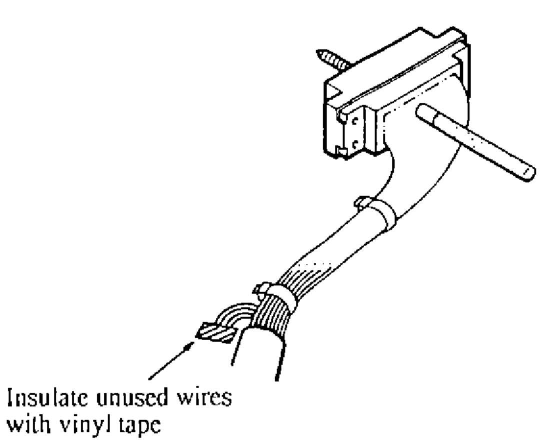

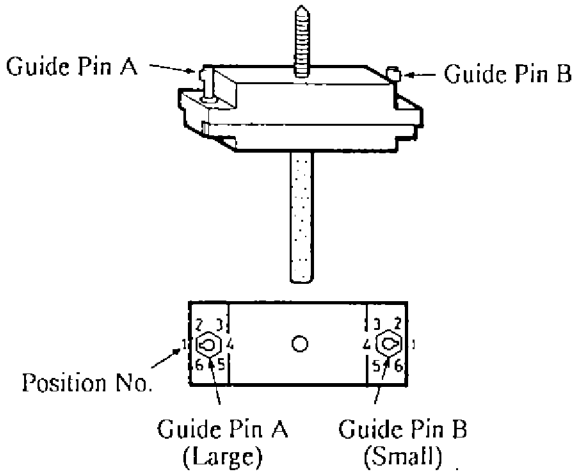

Positioning Guide Pins

Guide pins of the connector are used to indentify the mating receptacle. Position them as shown in the table.

Connector / Guide Pin	CN-A1	CN-A5	J201	Positioning Tool
Guide Pin A (Large)	1	5	1	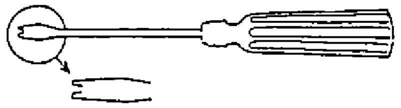
Guide Pin B (Small)	1	1	1	Type : 10-910-0179-0

Cable Clamping

Clamp the cable at the portion of shield folded back onto the armor.

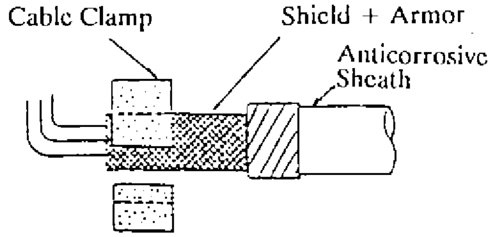

Connector NCS-253P	CN-A15

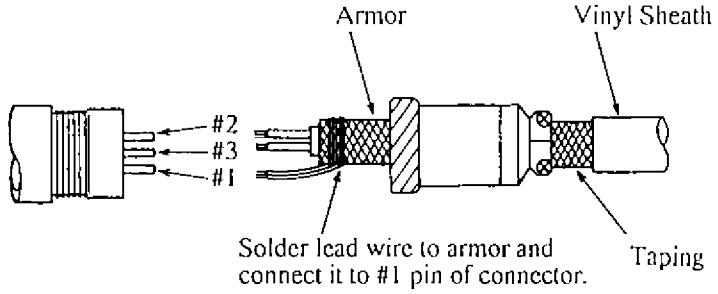

BNC Connector	CN-A7, CN-A8, CN-A9, CN-A10, CN-A11, CN-A12

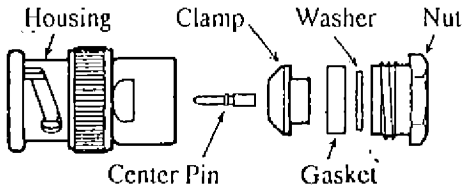

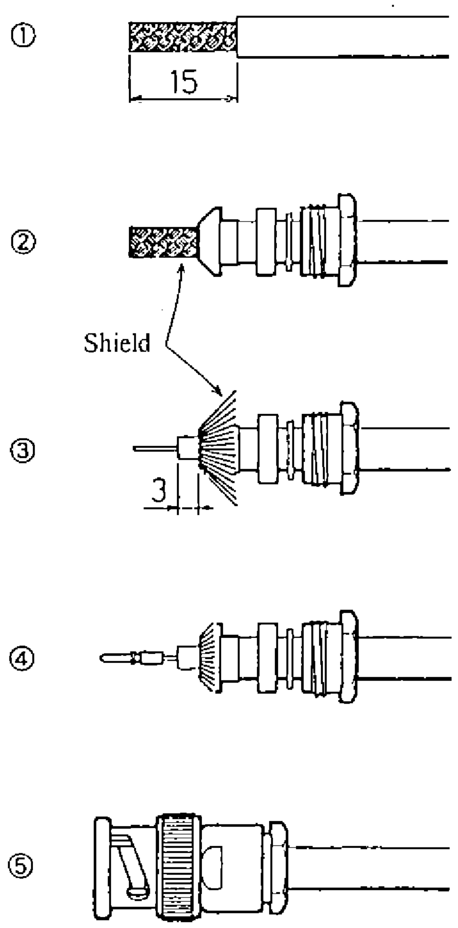

1. Remove vinyl sheath of the cable by 15mm. (Procedure 1)
2. Pass the cable through the nut, washer, gasket and clamp. (Procedure 2)
3. Unravel the shield and fold it back onto the clamp. (Procedure 3)
4. Cut off the insulator, leaving 3mm. (Procedure 3)
5. Cut off the shield as shown in the drawing. Solder the center chip to the conductor of the cable. (Procedure 4)
6. Pass the cable through the housing and tighten the nut. (Procedure 5)

承認 APPROVED	· ·	名称 TITLE	Cable Fabrication and Connector Assembling in Display/Interface Units
検図 CHECKED	· ·		
製図 DRAWN	· ·	図番 DWG.NO	

. 38P Connector (00-8016-038-000-751) | CN-E1

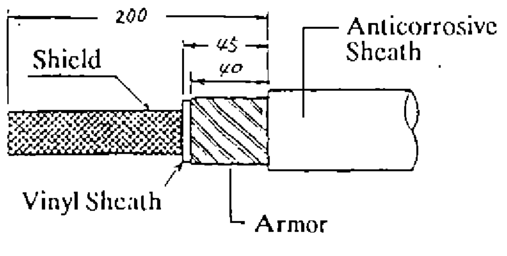

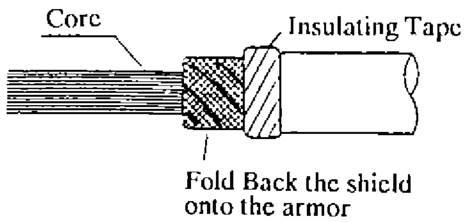

Assembling Connector

* Branch the unused wires outside the connector case.
* Fix the cover ①, taking heed of the cable outgoing direction.
* Dress the wires and fix the covers ② and ③. Use a fragment of cable sheath to secure the wires at the connector clamp.
* Shorten unused wires appropriately and treat their ends with vinyl tape to prevent short-circuiting.

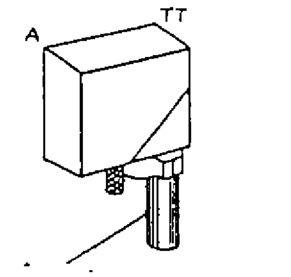

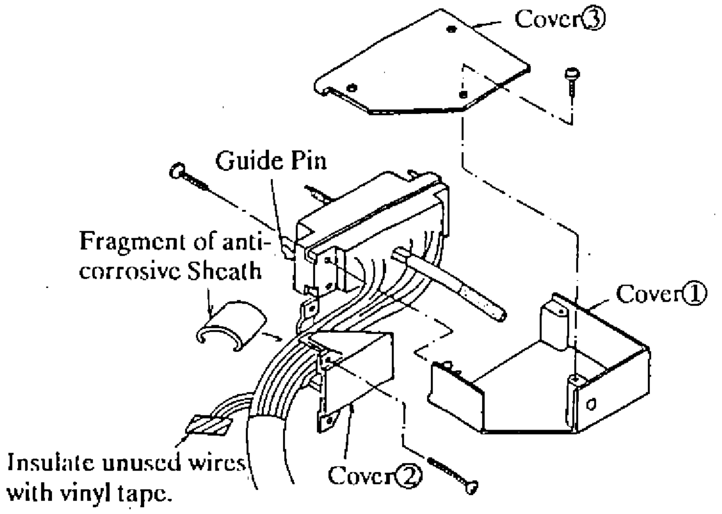

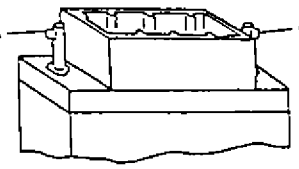

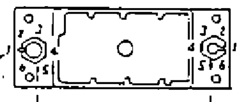

Positioning Guide Pins

Guide pins of the connector are used to identify the mating receptacle and should be positioned as below.

Connector / Guide Pin	CN-E1	Positioning Tool
Guide Pin A (Large)	2	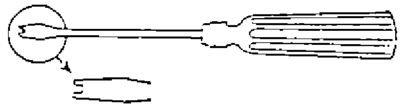 Type : 10-910-0179-0
Guide Pin B (Small)	1	

Clamping Cable (Power Unit Side)

Clamp the cable as shown at right.

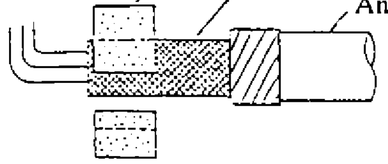

Fabrication of Cable 10S1259 Connected to Terminal Board TB-E1

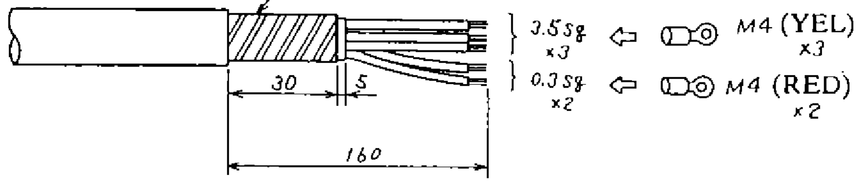

Fabrication of Cable DPYC-5.5 Connected to Terminal Board TB-E1

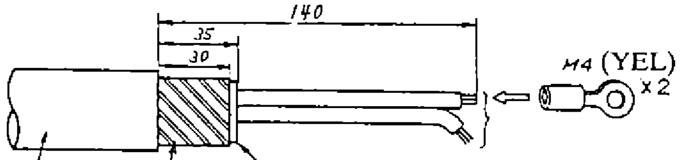

承 認 APPROVED	· ·	名 称 TITLE	Cable Fabrication and Connector Assembling in Power Unit
検 図 CHECKED	· ·		
製 図 DRAWN	· ·	図 番 DWG.NO	

38P Connector (00-8016-038-000-751) | CN-B2, CN-B3, CN-B4

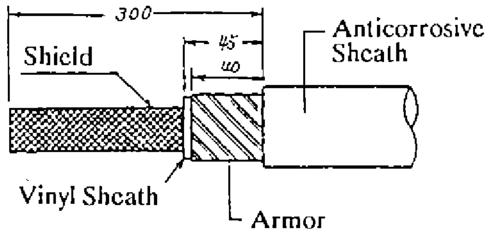

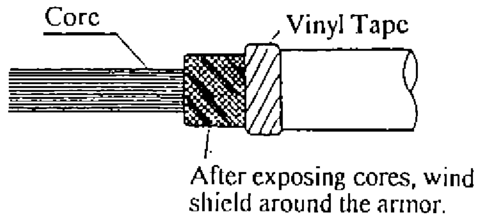

Assembling Connector

- Branch the unused wires outside the connector case.
- Fix the cover ①, taking heed of the cable outgoing direction.
- Dress the wires and fix the covers ② and ③. Use a fragment of cable sheath to secure the wires at the connector clamp.
- Shorten unused wires appropriately and treat their ends with vinyl tape to prevent short-circuiting.

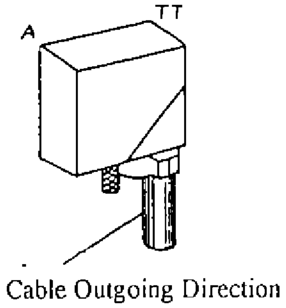

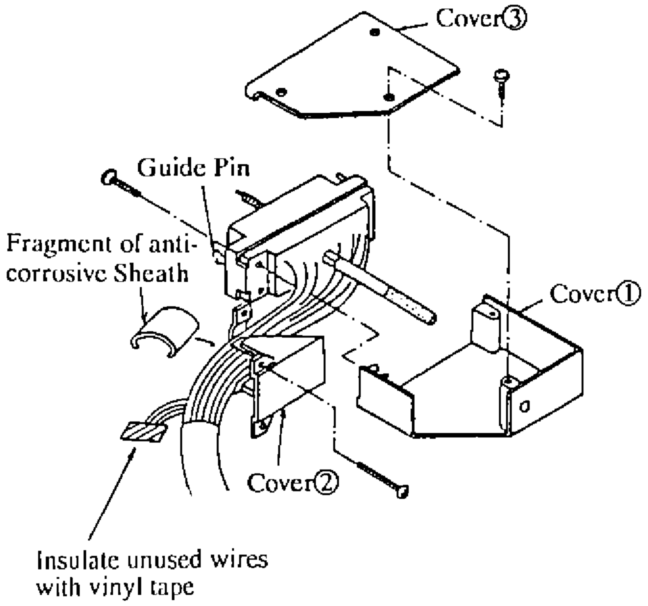

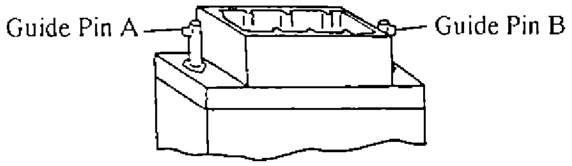

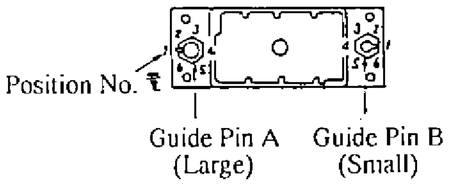

Positioning Guide Pins

Guide pins of the connector are used to indentify the mating receptacle and should be positioned as below.

Guide Pin \ Connector	CN-B2	CN-B3	CN-B4	Positioning Tool
Guide Pin A (Large)	1	1	3	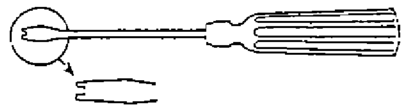
Guide Pin B (Small)	1	1	1	Type : 10-910-0179-0

Clamping Cable

Secure the cable with the cable clamp.

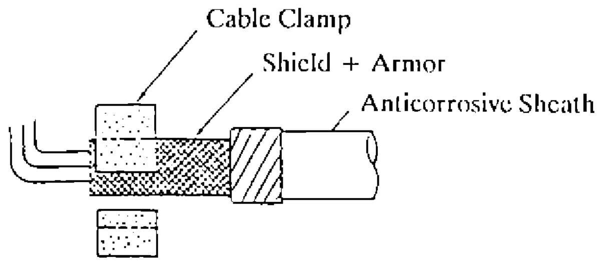

Fabrication of Cable 10S1259 Connected to Terminal Board TB-B1

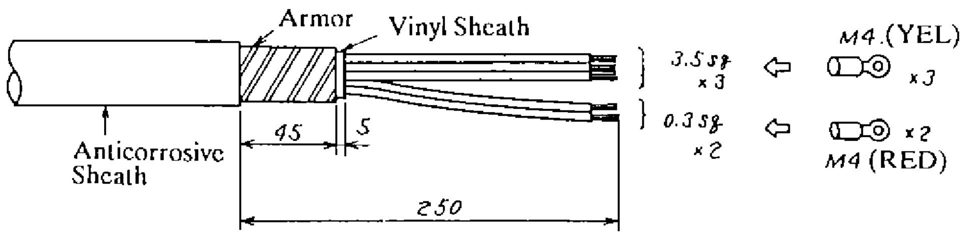

承認 APPROVED	. .	名称 TITLE	Cable Fabrication and Connector Assembling in Transmitter Unit
検図 CHECKED	. .		
製図 DRAWN	. .	図番 DWG.NO	

38P Connector. (00-8016-038-000-751)	CN-C2, CN-C3, CN-C5
20P Connector (00-8016-020-000-703)	CN-C4

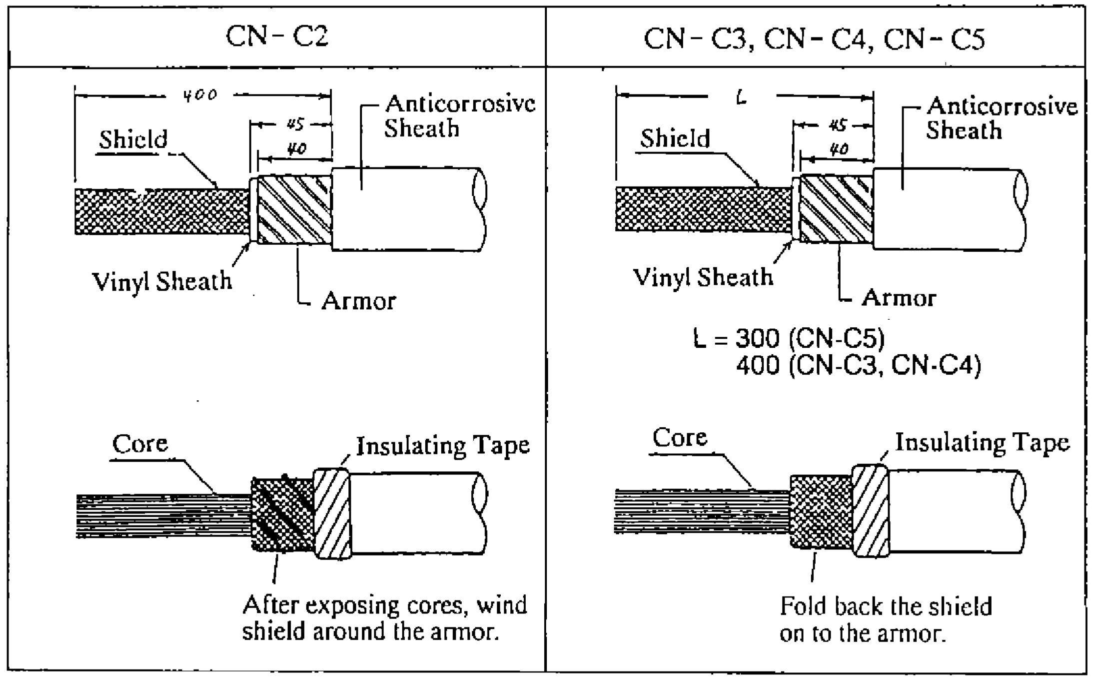

Assembling Connector

- Branch the unused wires outside the connector case.
- Fix the cover ①, taking heed of the cable outgoing direction.
- Dress the wires and fix the covers ② and ③. Use a fragment of cable sheath to secure the wires at the connector clamp.
- Shorten unused wires appropriately and treat their ends with vinyl tape to prevent short-circuiting.

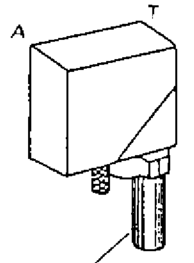

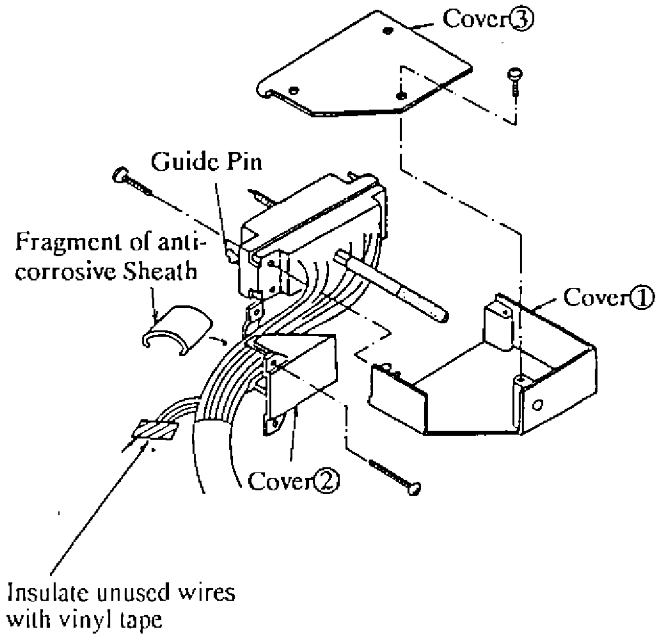

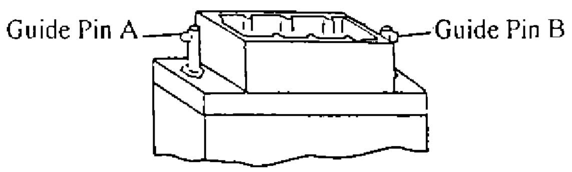

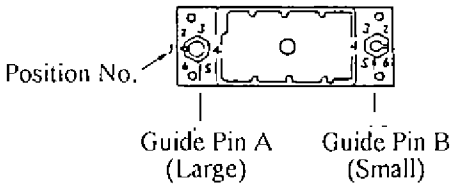

Positioning Guide Pins

Guide pins of the connector are used to indentify the mating receptacle and should be positioned as below.

Connector / Guide Pin	CN-C2	CN-C3	CN-C4	CN-C5
Guide Pin A (Large)	1	2	1	3
Guide Pin B (Small)	1	1	1	1

Positioning Tool

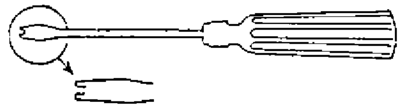

Type : 10-910-0179-0

Cable Clamping

Clamp the anticorrosive sheath of the cable.

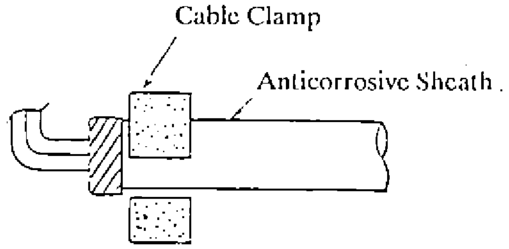

Fabrication of Cable Connected to Terminal Board TB-D1 in Raise/Lower Control Box

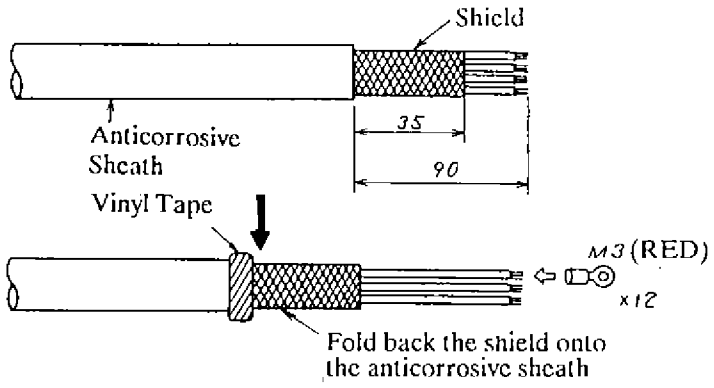

Fabrication of Cable 10S1259 Connected to Raise/Lower Control Box, Terminal Board TB-D2

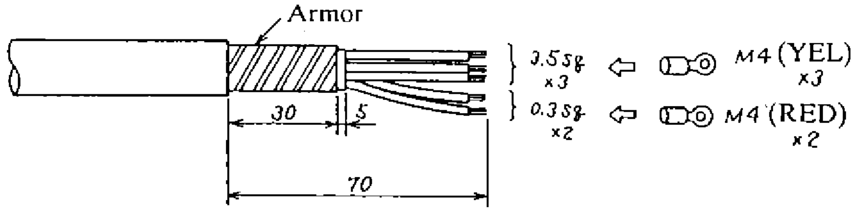

承認 APPROVED	. .	名称 TITLE	Cable Fabrication and Connector Assembling in Hull Unit (incl. Receiver Unit)
検図 CHECKED	. .		
製図 DRAWN	. .	図番 DWG.NO	

2.3. Connection of Transducer Cable

The transducer cables are supplied with connectors. Plug them into the receptacles in the transmitter unit, referring to the stickers on the cables.

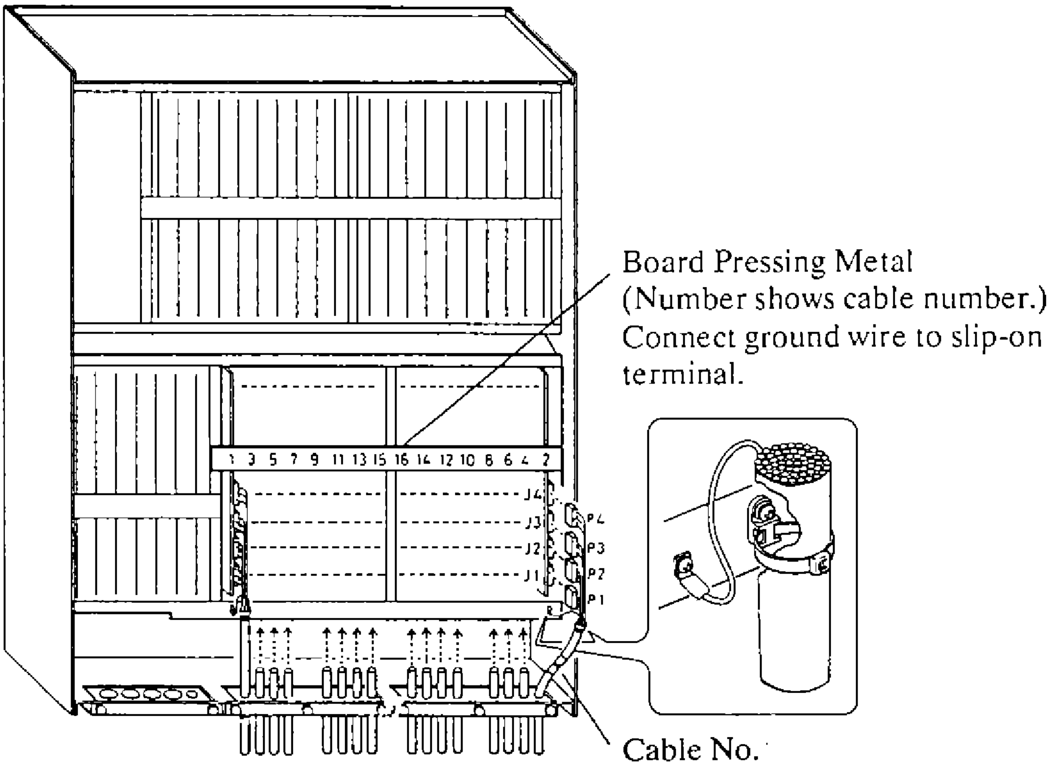

How to ground the transducer cable

1. Remove vinyl sheath as shown below.

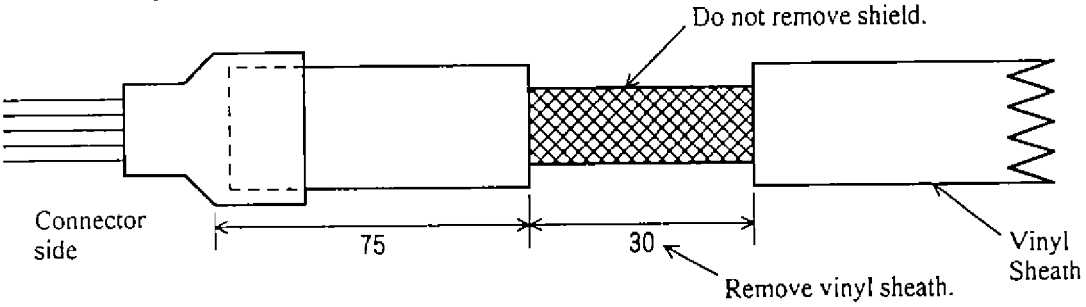

2. Insert shield sleeve from the connector side as shown below.

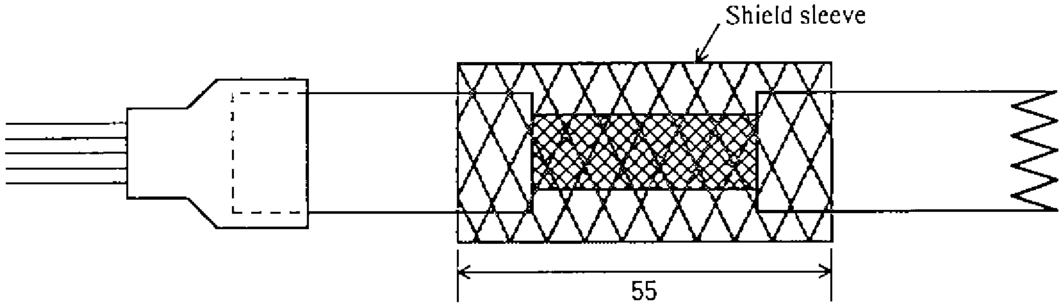

3. Wrap both ends of the sleeve with vinyl tape.

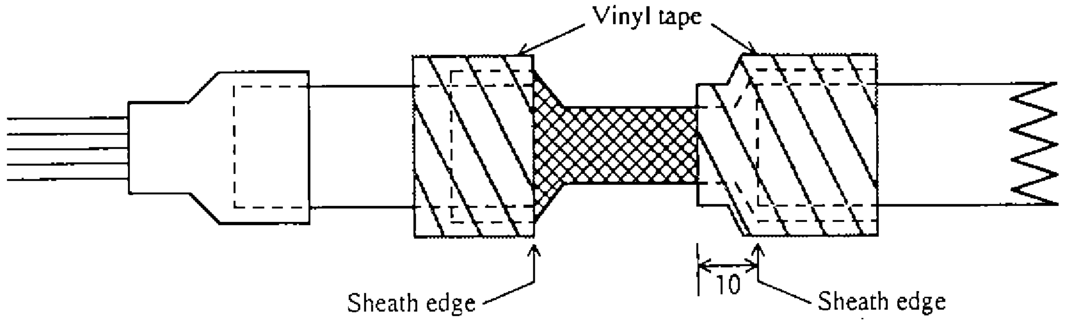

4. Lead the cable into the receiver unit and clamp it as follows.

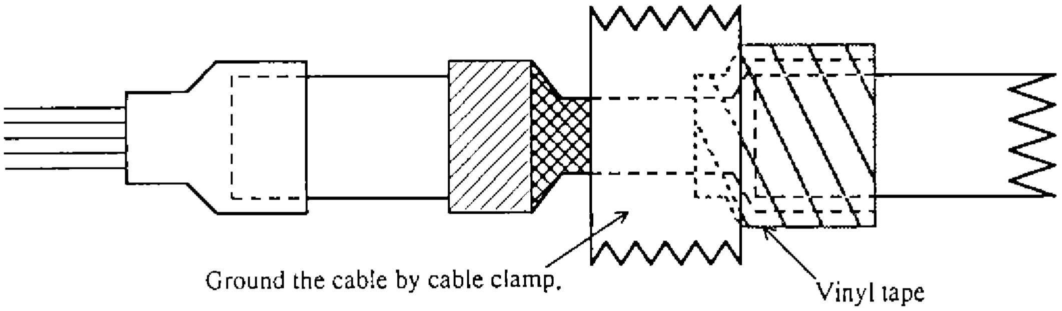

Note: Above steps 1 thru 3 may already have been completed at factory. In this case the entire shield is covered by vinyl tape. Remove portion of vinyl tape where cable lies in cable clamp to ground cable.

Note: 1. Use the connector puller (supplied) to unplug connectors.

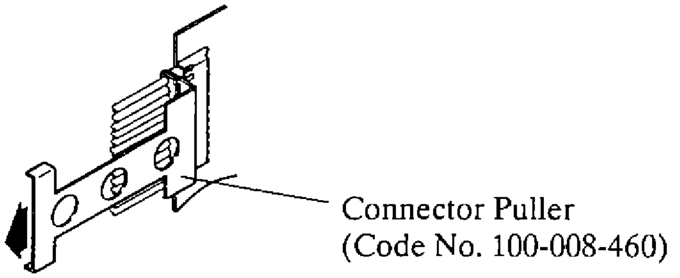

2. A special tool is needed to remove a contact pin from the connector. When one or some of the lead wires are disconnected near a connector, cut off all lead wires connected to the connector and solder the "XH connector assembly" (type 10-145 (13P) supplied as spare parts.)

2.4. Connecting Sub-display Unit CSH-216/216F (Option)

The sub-display unit CSH-216/216F is the same as the display unit CSH-210/210F in terms of outline dimension and control panel layout. It controls the sonar at a place remote from the display unit while observing picture on the screen. One sub-display unit can be connected to three display units.

2.4.1. Connection

Refer to interconnection diagram on page 2-4 and connector assembling/cable fabrication procedure on page 2-5.

Note: One sub-display unit can be connected to three sonars, but connection to different models (e.g. CSH-21 and CSH-21K) is not allowed except for combination of CSH-21F/22F and CSH-21K.

2.4.2. DIP Switch Setting

Set DIP switch S1 on RDCB board (10P6724) on the sub-display unit.

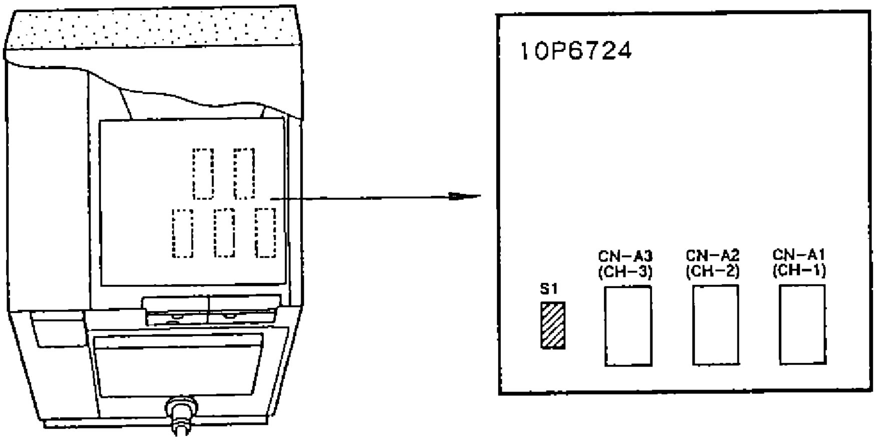

SW No.	Used for	Function
1 2 3	Display unit on CH-1 Display unit on CH-2 Display unit on CH-3	**ON:** Turning on sub-display unit automatically turns on display unit.
4 5 6	Display unit on CH-1 Display unit on CH-2 Display unit on CH-3	**ON:** Turning on display unit automatically turns on sub-display unit. **OFF:** Sub-display unit is not turned on when display unit is turned on.
7	Remote ON/OFF	Used in remote display unit. Set to ON in sub-display unit.
8	Not used	

Note: To have both the display unit and sub-display unit turned on when either unit is turned on, turn on sw #1 and #4. If, for example, switches #1/#4 are set to "ON", both display and sub-display units are turned on when either of the two units is turned on.

2.5. Connecting Remote Display Unit CSH-106 (Option)

The remote display unit can be connected to three display units, and one of them is selected on the remote display unit. Operating controls provided on the remote display are power on/off switch, brilliance control and channel selector. The channel selector selects one of the three display units.

2.5.1. Connection

For connection of both display and remote display units, refer to interconnection diagram on page 2-4 and cable fabrication/connector assembling procedure on page 2-5.

Note: The display unit has two ports: one for sub-display unit and the other for remote display unit. When the sub-display unit is not used, both ports can be connected to remote display units.

2.5.2. DIP Switch Setting

Set Dip Switch S1 on RDCB board 10P6711 in the remote display unit.

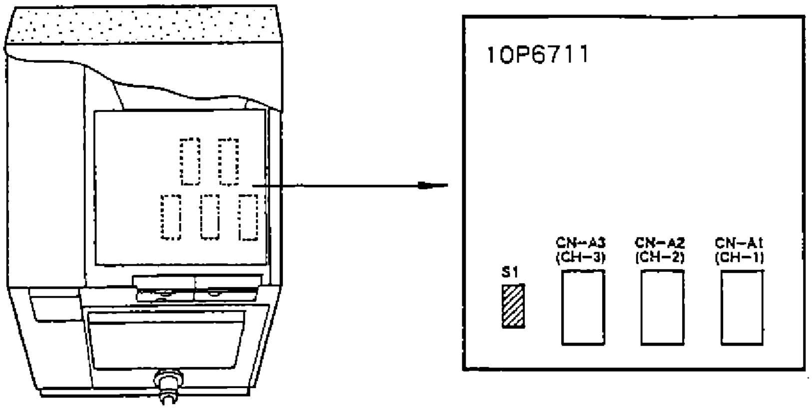

SW No.	Used for	Description
1 2 3	Display unit on CH-1 Display unit on CH-2 Display unit on CH-3	Unused
4 5 6	Display unit on CH-1 Display unit on CH-2 Display unit on CH-3	Turn ON when display unit is connected and OFF when there is no display unit.
7	Remote ON/OFF	**ON:** Remote on/off of remote display unit from display unit. When one or all of the connected display units is turned on/off, remote display unit turns on/off. **OFF:** Remote display is turned on/off by its ON/OFF switch. *Note: The remote display can not be turned on unless display unit is on.*
8	Not used	

2.6. Synchronize Transmission with Other Sonars/Echo Sounders

To synchronize the transmission of CSH-21 series sonars to that of other sonar or echo sounders, wire units as follows.

2.6.1. Wiring

a) For Current driven KP

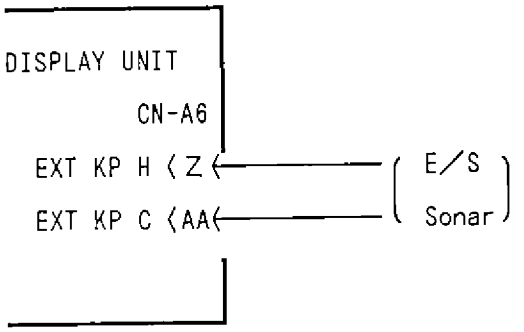

b) For voltage driven KP

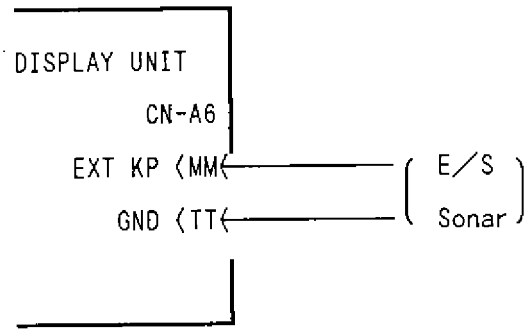

2.6.2. Menu Setting

Set polarity of the KP on the INIT SET/TEST menu. Refer to the operator's manual for operation on the menu.

Note: To output KP to other sonar or echo sounder, wire units as follows.

a) Current driven KP output

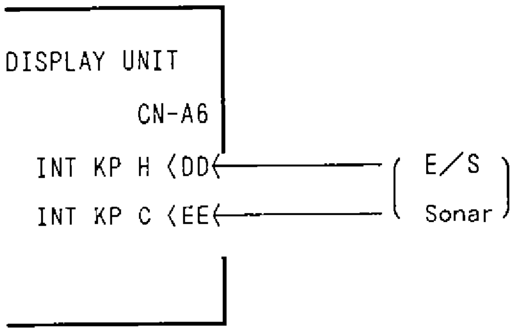

b) Voltage driven KP output

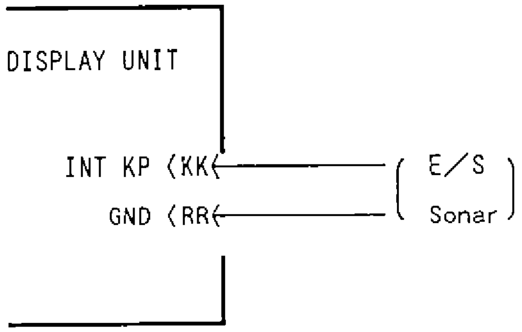

2.7. Interlocking Operation with Other Sonar

When two CSH-21/22 series and CSH-71/72/81/82 sonars are installed, range/tilt/fish mark, etc. can be mutually interlocked. If, for example, the range is interlocked, changing the range in one sonar automatically sets the other sonar to the same range.

2.7.1. Interconnection

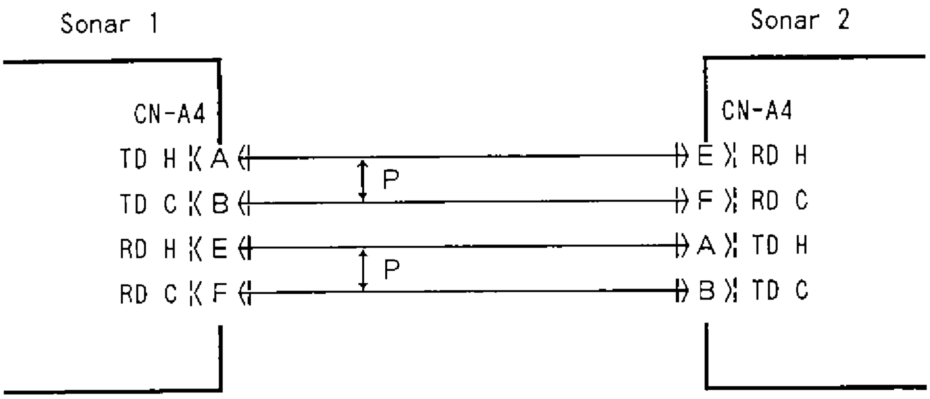

Note:1. The functions to be interlocked can be selected on the SYSTEM menu. Refer to the operator's manual.

2. To interlock three sonars wire then as follows.

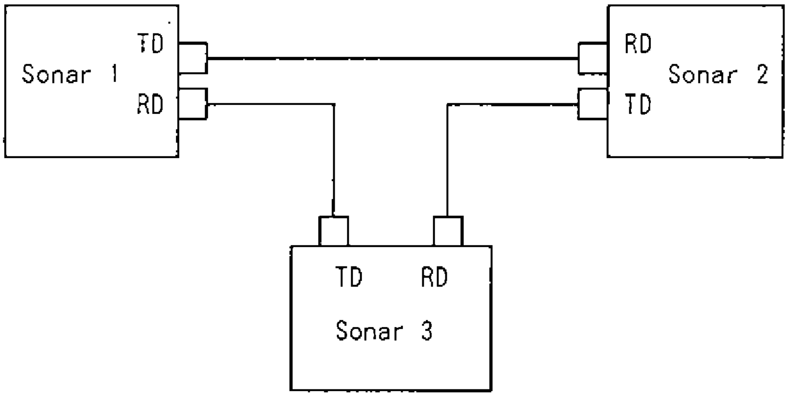

2.7.2. DIP Switch Setting

Set ID code on DIP switch #1 to #3 on main panel. Any code is acceptable, provided that it is not the same as that set on the other sonar. Refer to page 5-14 for location of the DIP switch.

2.8. Interlocking Remote Control

To control multiple display units by one remote control box, wire units as follows.

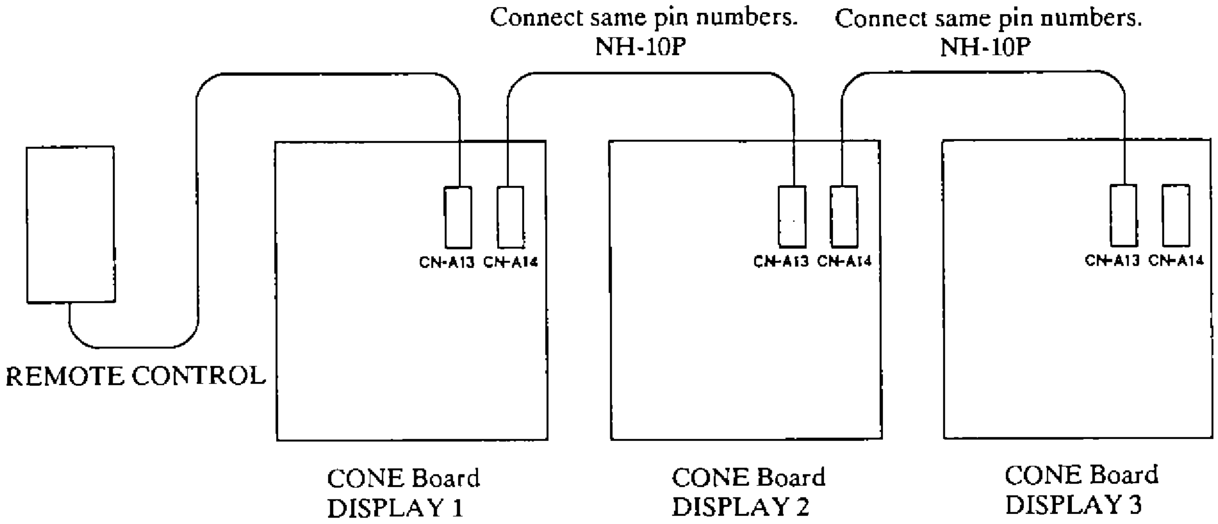

CHAPTER 3.
CONNECTING INTERFACE UNIT TO NAV SENSOR/FISHING EQUIPMENT

If the CSH-21/22 series sonar is combined with other nav sensor and fishing equipment, its function is expanded to include true motion presentation, echo sounder picture, FNZ marker presentation, etc. This chapter first describes the methods of interfacing the CSH-21/22 series sonar with other equipment and then wiring details.

3.1. Connections for True Motion and Target Lock Function

Ship's heading data (digital) and speed data (200 pulses/nm) are required to provide the true motion and target lock functions. Both data are fed to display unit via interface unit CS-120A.

Basically, there are two methods to feed the data;

1) Ship's heading data is fed to J205 from A/D converter AD-100 and the ship's speed data to J206 from the electromagnetic speed log.

2) Both ship's heading and speed data are fed to J207 from the CIF line of the CI-30/50/60.

Select either of the methods depending on the equipment installed on board. When both methods are available, it is recommended to connect both and select either of them by the DIP switch inside CS-120A.

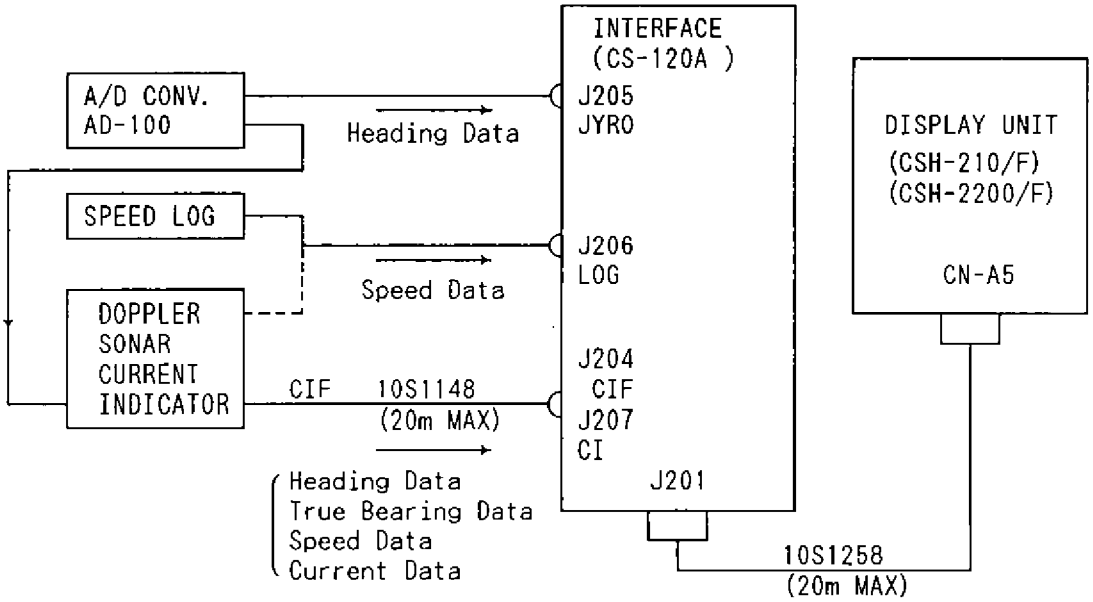

Note 1. AD-100 outputs two types of data. Do not use data for radars (25 ms interval).

2. 200 pulses/mile ship's speed data can be taken from doppler sonar current indicator.

3.2. Connections for Echo Sounder Picture and FNZ Markers

To provide echo sounder picture and FNZ markers, connect echo sounder to J203 and net sonde to J202.
The signals applied to J202 and J203 are;

J202: Net sonde signal and trigger signal (keying pulse of echo sounder)
A white line signal from the echo sounder may be additionally applied as described on page 3-3 if the digital depth data is not available on J204.

J203: Echo signal and keying pulse from an echo sounder

Method 1

Displaying echo sounder picture

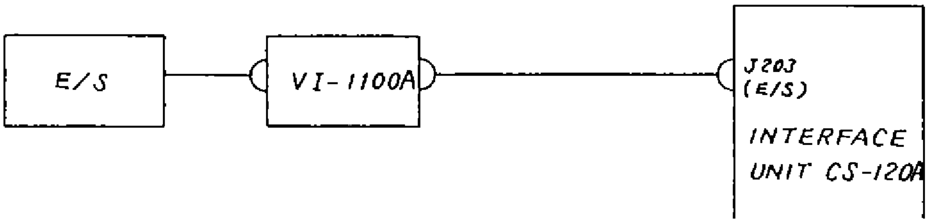

Method 2

Displaying echo sounder picture and FNZ marker by one echo sounder

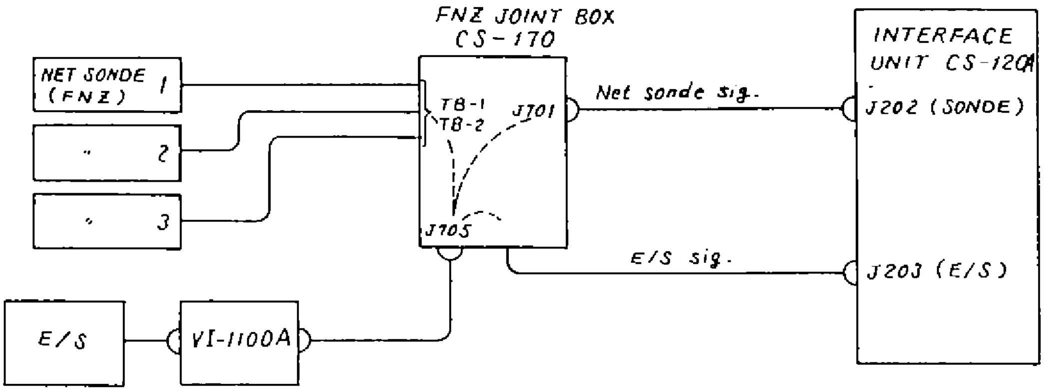

This method is used when the net sonde is installed and both echo sounder and net sonde signals are taken from the same echo sounder. The net sonde signal is applied to both J202 and J203.

Method 3

Displaying echo sounder picture and FNZ markers by separate echo sounders

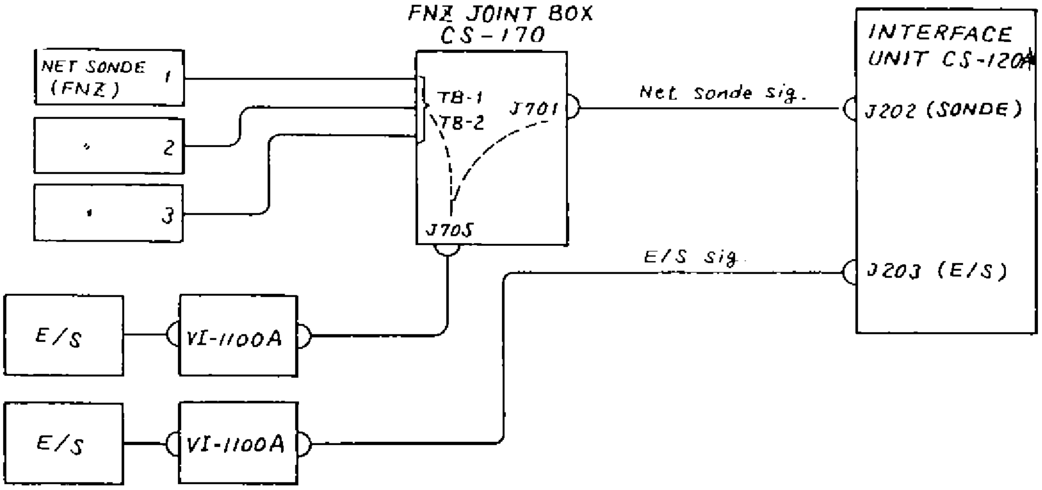

3.3. Connections for Digital Readout of Ship's Position, Water Temperature and Depth

The data for these readout are taken from the equipment shown in the table and entered to J204. When data from multiple equipment are entered, use hybrid interface IF-5000 to feed the data serially.

Data Name	Data Source
Ship's Position	Loran Navigator, Sat-Nav, GPS Navigator
Water Temperature	Temperature Indicator T-2000/TI-20, Nav-equipment Connected to temperature sensor
Depth	Color Video Sounder, Echo Sounder FE-822

Note: When a color video sounder which has digital depth data output is not available on board, the white line signal of paper recording echo sounder can be used to provide digital depth readout. Connect the echo sounder as shown below or as shown in methods 2 and 3 of para 3-2 and operate the echo sounder front panel controls so that the white line is effected on the seabed contour.

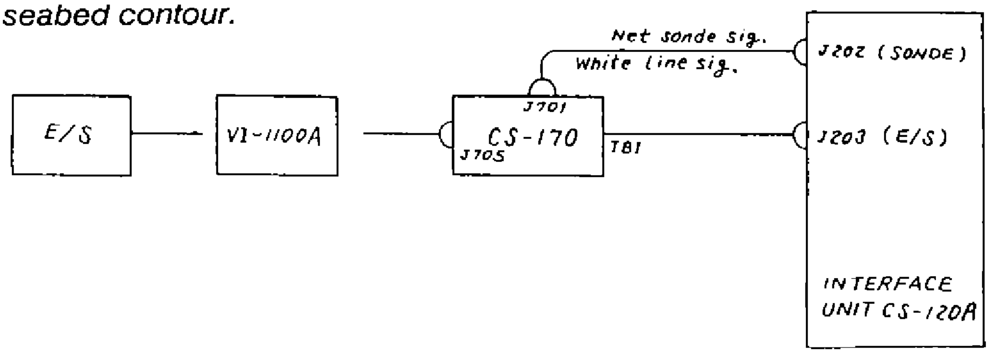

3.4. Wiring

Perform the wiring, referring to "Interconnection Diagram" on page 3-5 and "Cable Fabrication Drawing" on pages 3-6 and 3-7.

List of Cables

Wire Symbol	Name
○	Vinyl Sheath Wire
O	Shielded Wire
⊂⊃	Twisted Pair Wire

02S8040

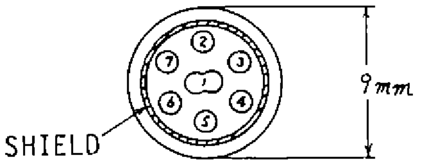

NO.	COLOR
1	WHT/BLK
2	BLK
3	PNK
4	GRN
3	ORG
6	YEL
7	RED

CO-SPEVV-SB-C 0.2sq. 5P

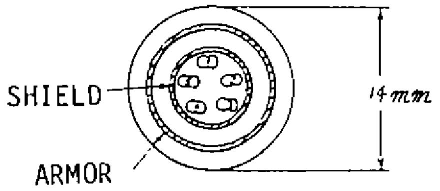

NO.	COLOR
1	YEL/BLU
2	YEL/WHT
3	YEL/RED
4	YEL/BLU
5	YEL/GRN

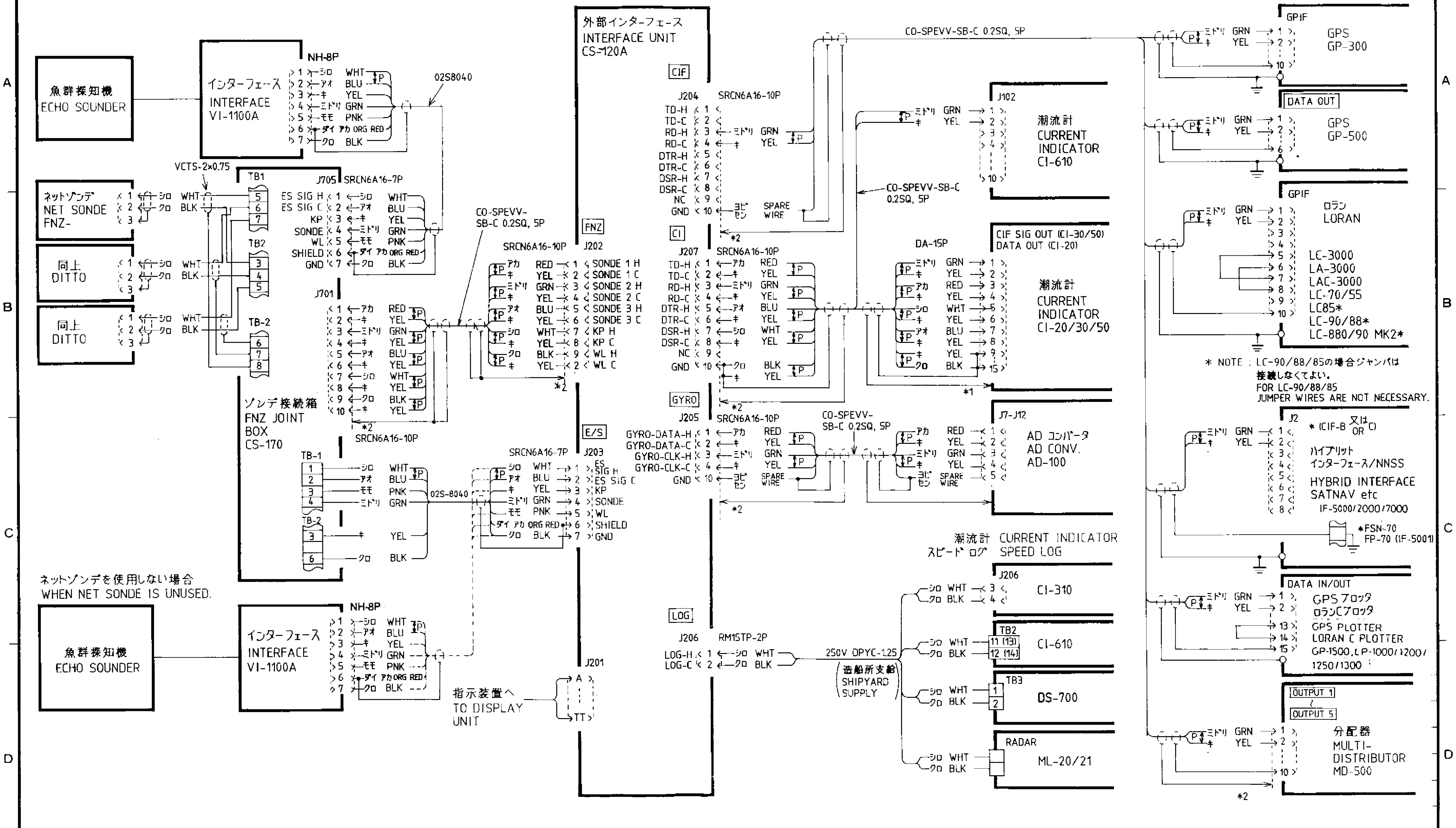

*1 ケーブルクランプでアースにおとす。
GROUND THROUGH CABLE CLAMP.

*2 コネクタケースでアースにおとす。
GROUND THROUGH CONNECTOR CASE.

承認 APPROVED	MAR. 29 '91 T. NAKANO	名称 TITLE	CS-120A 外部インターフェース相互結線図 INTERFACE UNIT INTERCONNECTION DIAGRAM
検図 CHECKED	MAR. 29 '91 Y. MIYOSHI		
製図 DRAWN	MAR. 29 '91 H. HONDA	図番 DWG. NO.	C1238-003-J

Cable Fabrication/Connector Assembling

10P Connecotr (SRCN6A16)	J202 (FNZ)J204 (CIF), J205 (GYRO), J207 (CIF)

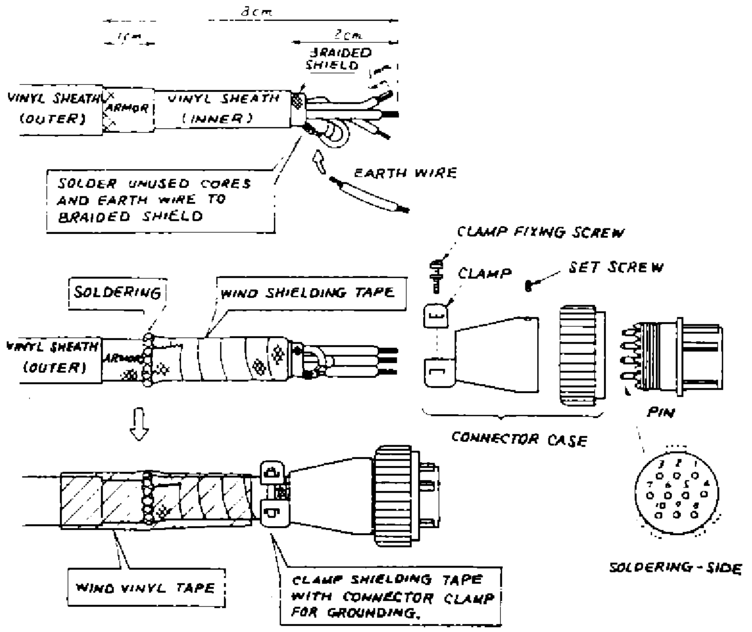

7P Connector (SRCN6A16-7P)	J203 (ES)

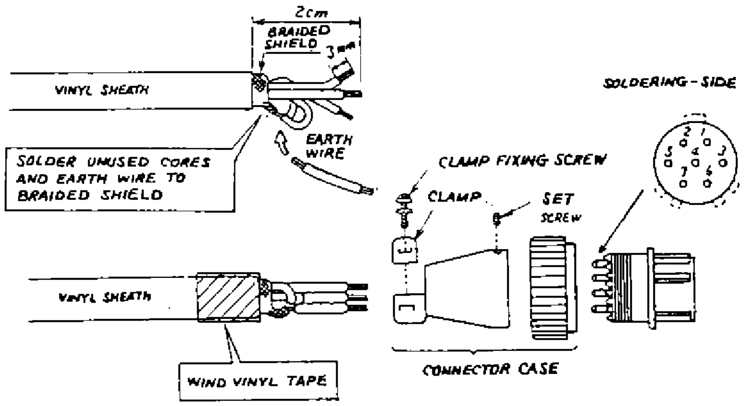

CHAPTER 4.
ALTERATION OF POWER SUPPLY

To operate the display unit on ship's mains of 110VAC or 220VAC, use step-down transformer PT-400. For the power unit, change the transformer taps as below and connect the ships mains directly.

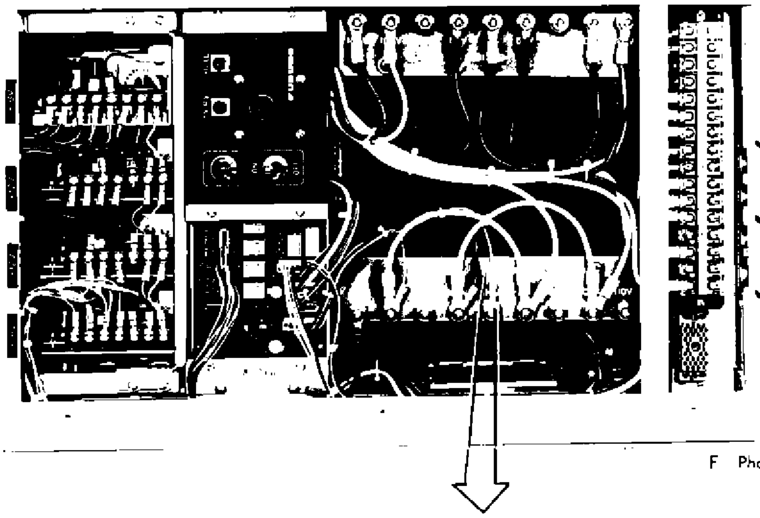

The unit has been set for 100VAC when delivered.

F Photo No.2017

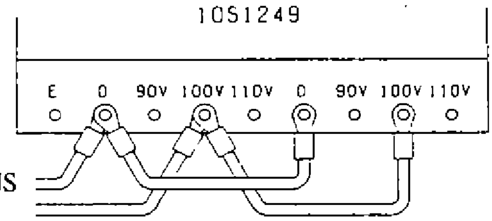

SHIP'S MAINS

For 100VAC Ship's Mains

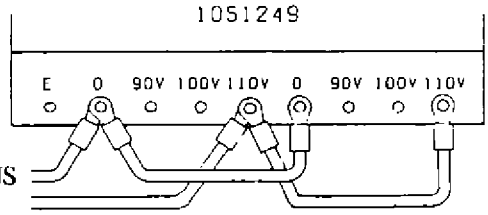

SHIP'S MAINS

For 110VAC Ship's Mains

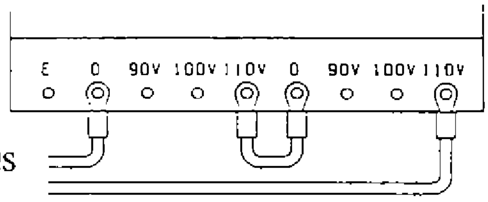

SHIP'S MAINS

For 220VAC Ship's Mains

CHAPTER 5. ADJUSTMENT AND CHECK AT INSTALLATION

5.1. General

Check all items of the check list on pages iv to vi.
The following explains the check and adjustment methods.

5.2. Wiring Check

TITLE	PAGE
INTERCONNECTION DIAGRAM	2-4
INTERFACE UNIT INTERCONNECTION DIAGRAM	3-5

5.3. Ship's Mains Voltage Check

CHECK POINT	RATINGS
Between (1) and (3) of TB-E1 in power unit	100VAC

Confirm that the ship's mains voltage is within ratings during raise/lower operation of the transducer.

5.4. Line Voltage Check

Check that the following voltages are within ratings with the POWER switches of all units turned on.

a) Line voltages in power unit

Check that all lamps on the power unit light up.

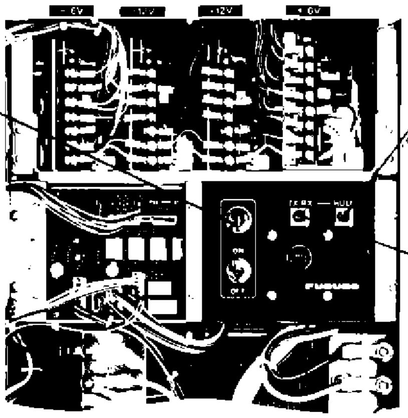

b) Line voltages in transmitter unit (measured at test points)

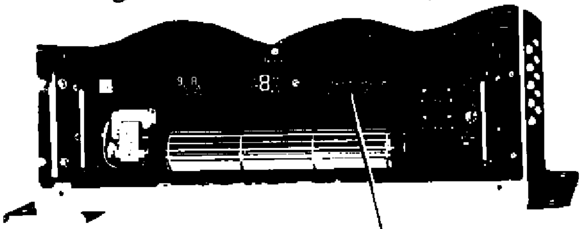

Item	Meter Reading
+5V	+5V±0.1V
+15V	+15V±0.5V
-15V	-15V±0.5V

c) Line voltages in receiver unit (measured at test points)

Item	Meter Reading
+5V	+5V to +5.1V
+6V	+6V to +6.2V
-6V	-6V to -6.2V
+12V	+12V to +12.5V
-12V	-12V to -12.5V

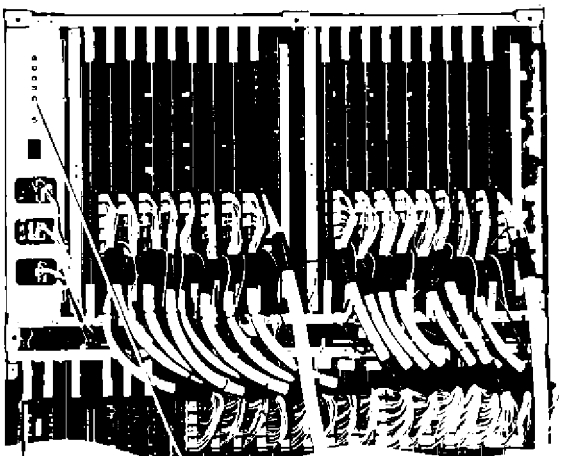

NOTE: The ground terminal is not provided on the panel of the power supply circuit. Use the one on the RCON board for measurement.

(Be careful not to short the test point to the chassis with the test lead of the multimeter.)

d) Line voltages in display unit

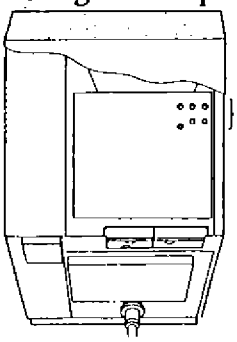

Item	Meter Reading
+24V	22.8 to 25.2V
+12V	11.5 to 12.5V
+5V	4.9 to 5.1V
-12V	-11.5 to -12.5V

5.5. LED Status Check

5.5.1. Power Unit

Check the LED status on the PWR board(10P6133).

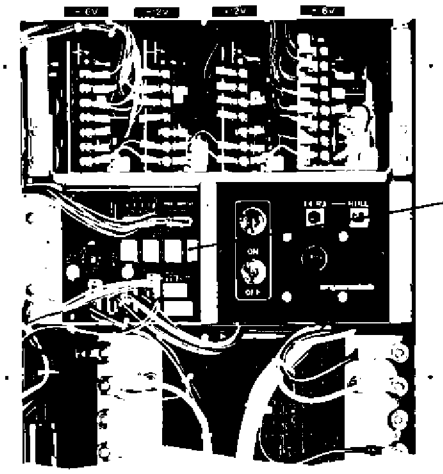

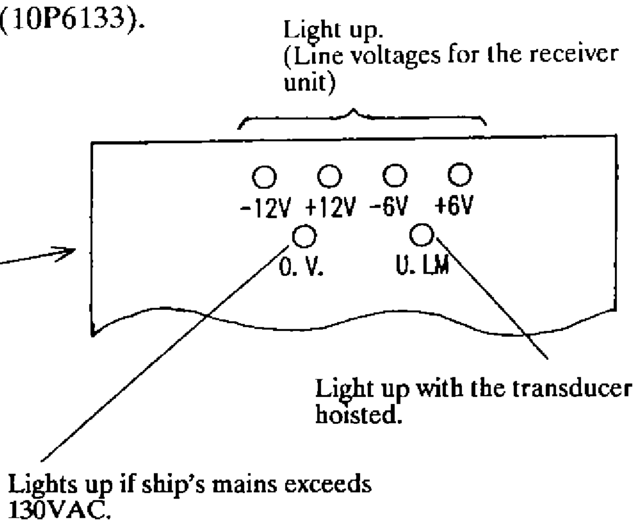

5.5.2. Transmitter Unit

Check the LED status on the CPU board(10P6150) and CHECK board(10P6155).

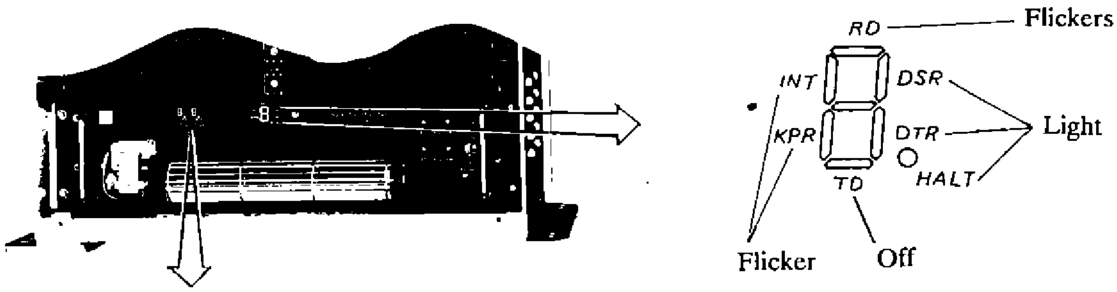

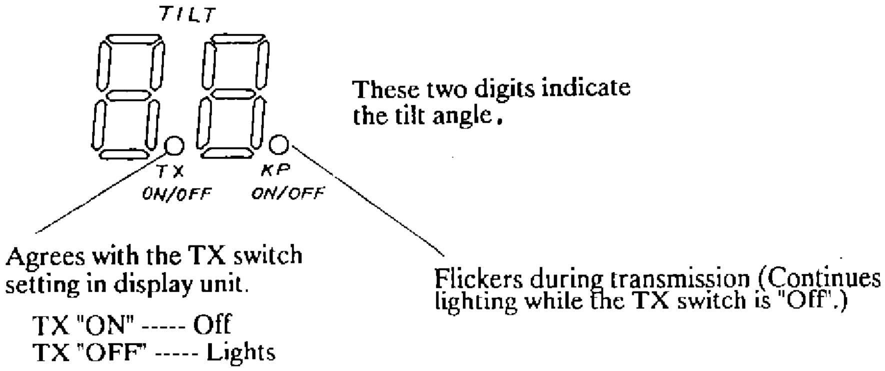

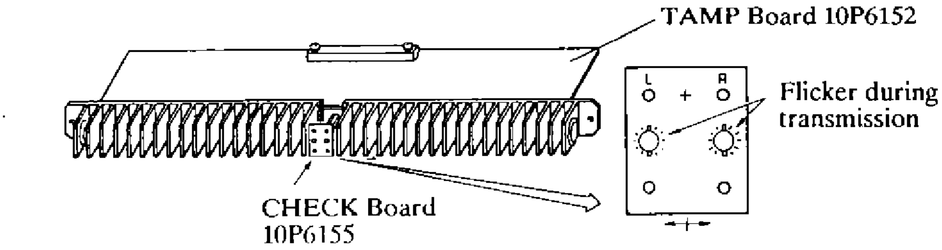

c) Receiver Unit

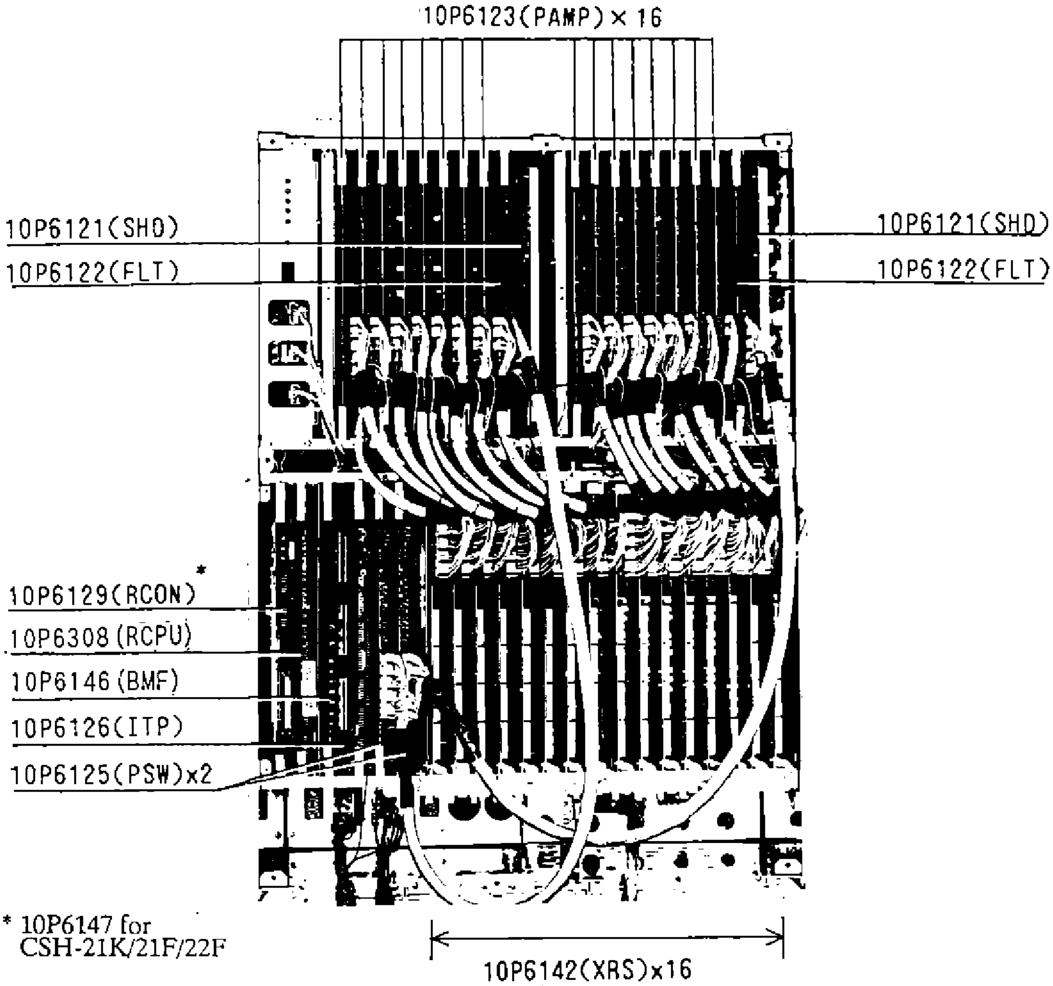

* 10P6147 for CSH-21K/21F/22F

10P6121(SHD)	10P6146(BMF)	10P6126(ITP)	10P6125(PSW)

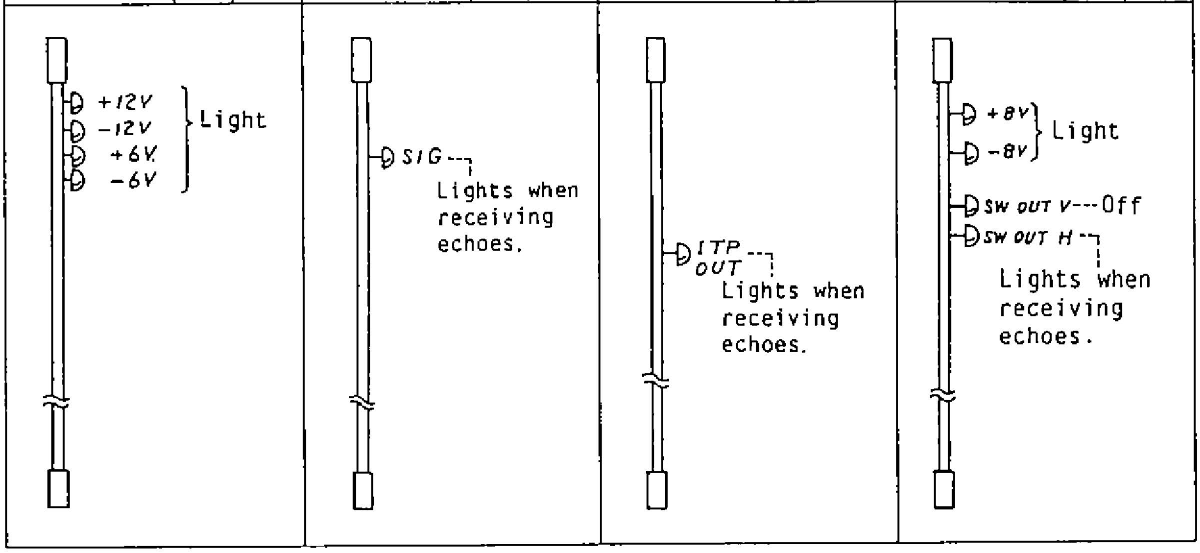

5.6. Voltage Adjustment Required After Installation

+6V and +12V of the receiver unit are supplied from the power supply unit and are subject to change by the cable length between the two units. Check the voltages in the receiver unit and if necessary adjust the potentiometers in the power supply unit. Note that low +6V line voltage causes poor sensitivity problem.

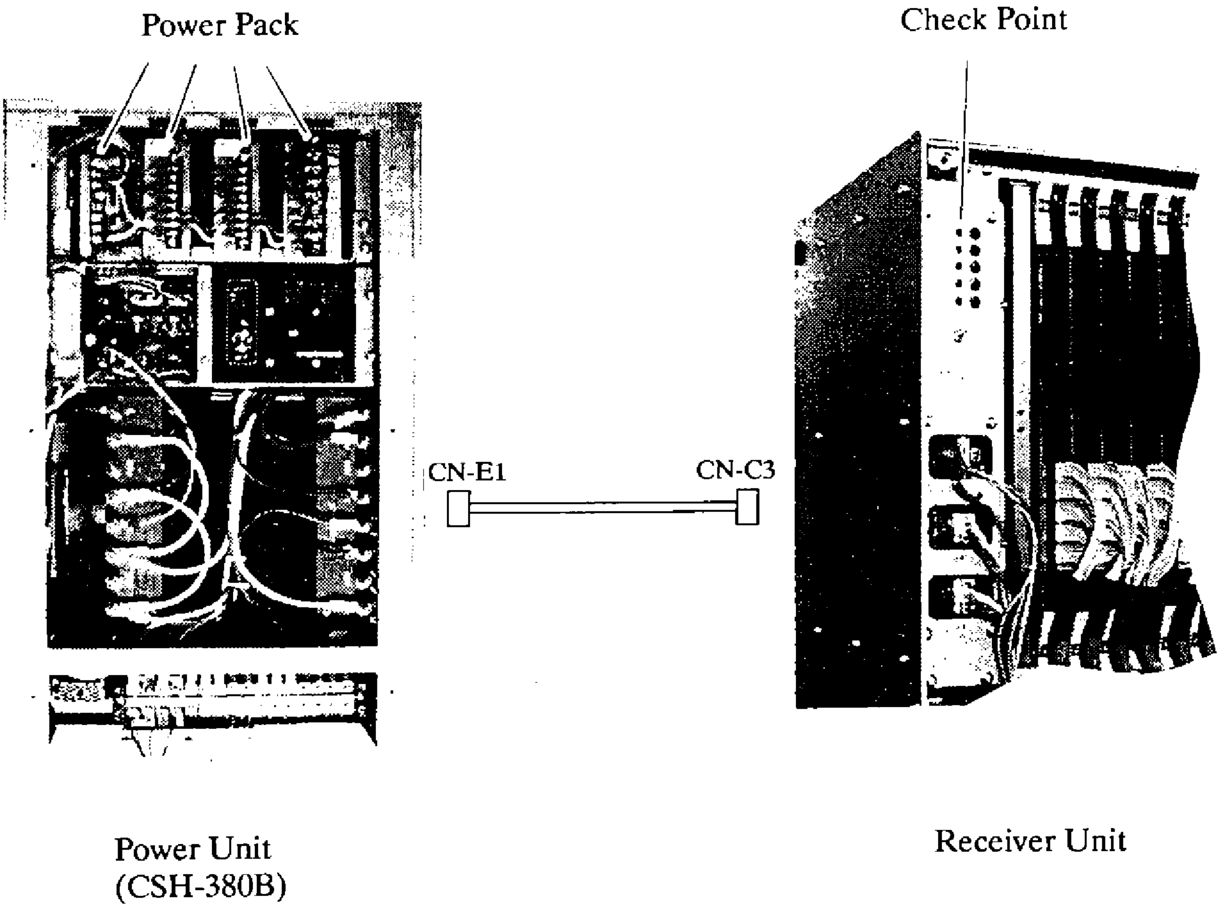

5.7. Check of Raise/Lower Operation

1. Press the POWER switch ON to turn on the equipment and check that the LEDs above the ON and "⇑"switches light up.

2. Check that the "5V" and "UP" LEDs on the raise/lower control box light up.

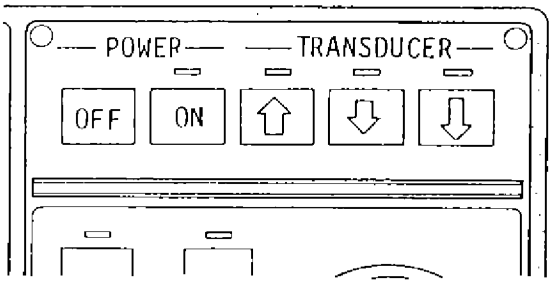

Display Unit Panel

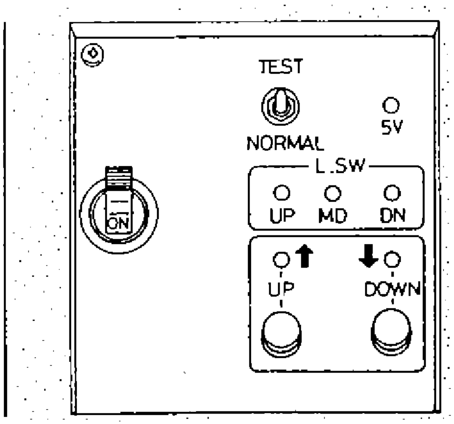

Raise/Lower Control Box

3. Remove the cover of the raise/lower control box and check the following voltages.

Terminal Board	Terminal No.	Voltage
TB-D1	7 - 8	+12V
TB-D2	1 - 2 2 - 3 1 - 3	180VAC 180VAC 360VAC

4. In the raise/lower control box, turn the TEST/NORMAL switch to "TEST" and press the "⇓"(lower) switch to check that the transducer lowers. Also check that the "MD" LED lights when the MID limit switch is kicked during lowering. Note that the transducer does not stop at the position of the MID limit switch in the TEST operation.

5. Check that the transducer stops whenever the "⇓"(lower) switch is released.

6. Press the "⇓"(lower) switch again to check that the transducer stops at the moment the lower limit switch is kicked.

7. Perform the above check also for the raising operation.

8. Check that LEDs on the panel of the raise/lower control box light as follows.
   1. The UP, MD and DN LEDs light while the corresponding limit switches are kicked.
   2. The "⇑"(raise) and "⇓"(lower) LEDs light while the corresponding push button switches are pressed.

9. After the above check, set the TEST/NORMAL switch to "NORMAL".

10. Next, check the raise/lower operation at the display unit. (The check should be started with the transducer raised.)

11. Press the "⇓"(midpoint) switch to check that the transducer descends to the mid position. Check also that the LED above the "⇓" switch flickers while the transducer is moving and lights stationary with a pip sound emitted when it stops at the mid position.

12. In the same manner, press the "⇓"(full) switch and check the operation of the transducer and the LED.

13. Press the POWER OFF switch to check that the transducer rises and the equipment is switched off automatically when the transducer is completely retracted.

14. Check that the raise operation can be performed with the "⇑" switch as well as the POWER OFF switch.

5.8. Heading Adjustment

When the HEAD mark "⇒" on the flange of hull unit is out of alignment with ship's bow, perform heading adjustment in the display unit.

1. To correct the ship's heading, locate a target in the bow direction (a buoy, etc.) and display it on the screen at a close range. The heading alignment is correct when the target is displayed at 12 o'clock direction on the screen.

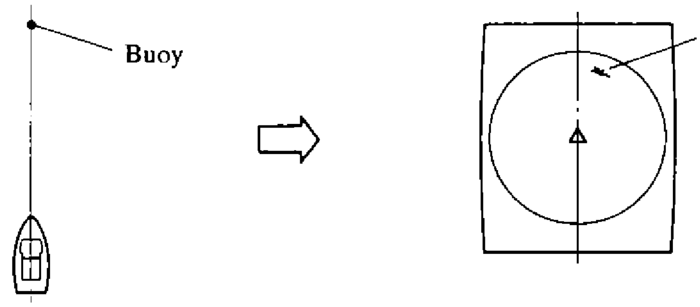

When the target on the screen is skewed to the right, the hull unit heading is skewed to the left.

2. When the heading alignment is incorrect, open the INIT SET/TEST menu and enter a correction angle. The following table shows an example of how to determine the correction value.

Target displaced 30° to port	Set correction angle 30°
Target displaced 30° to starboard	Set correction angle 330°

5.9. Selection of Input Data (Interface Unit CS-120A)

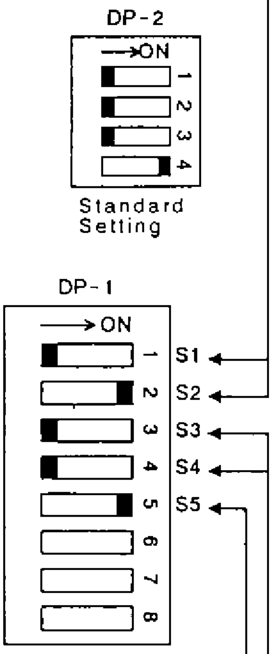

Own ship's speed and bearing (gyro, speed log, current indicator, etc.)

Input Device	S1	S2
Gyrocompass, Speed log	OFF	OFF
GPS or DR (NOTE 1)	ON	OFF
Current Indicator	OFF	ON
DR or Current Ind. (NOTE 2)	ON	ON

Select navigation device which feeds navigation data for drawing ship's track by S1 and S2.

NOTE 1: GPS has priority. Switched automatically from GPS to DR when GPS is absent for more than 61 seconds or ship's speed measured with GPS is 0.2 kts or less. If DR is not available when switched from GPS to DR, heading readout is fixed at 0 degrees and ship's track is plotted by using the last GPS data obtained before switching to DR. If you still require speed/heading data from GPS even though ship's speed is less than 0.2kt, set the GPS format to DR. Note however that the heading information will be unstable if the ship's speed is less than 0.2 kts.

NOTE 2: Use this setting when both DR and current indicator are available. Normally DR data has highest priority, and is switched to current indicator data if the DR data is absent for more than 61 seconds. The heading data for the bearing scale is always provided from the current indicator. When DR data is taken from GPS be sure to set GPS output format to "DR." GPS with no "DR" output format cannot be used.

Own ship's position (L/L or TD)

Input Device	S3	S4
Loran C	OFF	OFF
GPS or DR (See NOTE)	ON	OFF
Omega	OFF	ON
Loran A	ON	ON

NOTE: Use this position for GPS or DR. The GPS data has priority.

Depth (Echo Sounder, Color Video Sounder, etc.)

Input Device	S5
Echo Sounder (NOTE 1)	OFF
CIF format (NOTE 2)	ON

NOTE 1: Use this position for white line pulse when the depth data is taken from an echo sounder which has no digital depth output.

NOTE 2: Use this position when the depth data is taken from an echo sounder with digital data output (FE-822, FCV, ED-202) or IF-3000/IF-5000.

5.10. Setting Net Sonde Transmitter Intervals

When the net sonde is connected to the CSH-21/22 series sonar, net sonde markers are displayed. Accuracy of marker position on the screen depends on how precisely the positions of the net sonde transmitters are set on the menu. Measure positions of net sonde transmitters on the net, and set length R0, R1 and R2.

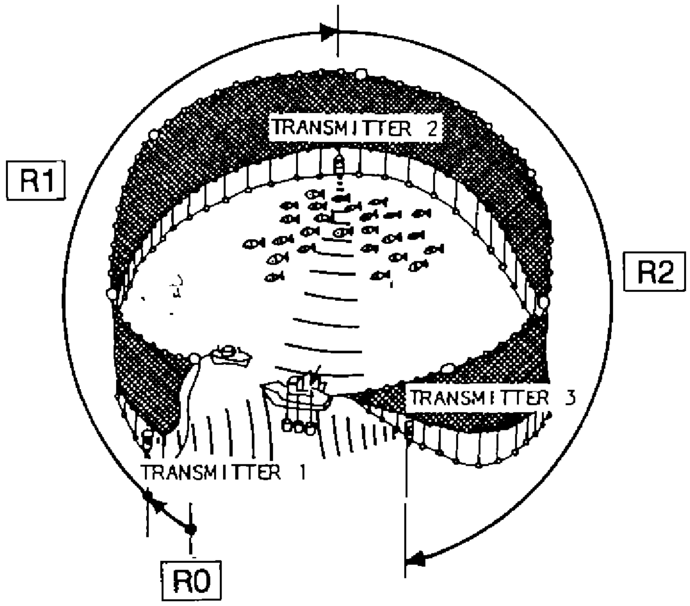

R0 : Net length from the front end to transmitter 1.

R1 : Net length between transmitters 1 and 2.

R2 : Net length between transmitters 2 and 3.

5.10.1. Setting Procedure

1. Press both "⇓" and MENU keys simultaneously to open the DATA SET menu.
2. Choose "NET SONDE" with arrow keys.
3. Set net sonde transmitter quantity and intervals.

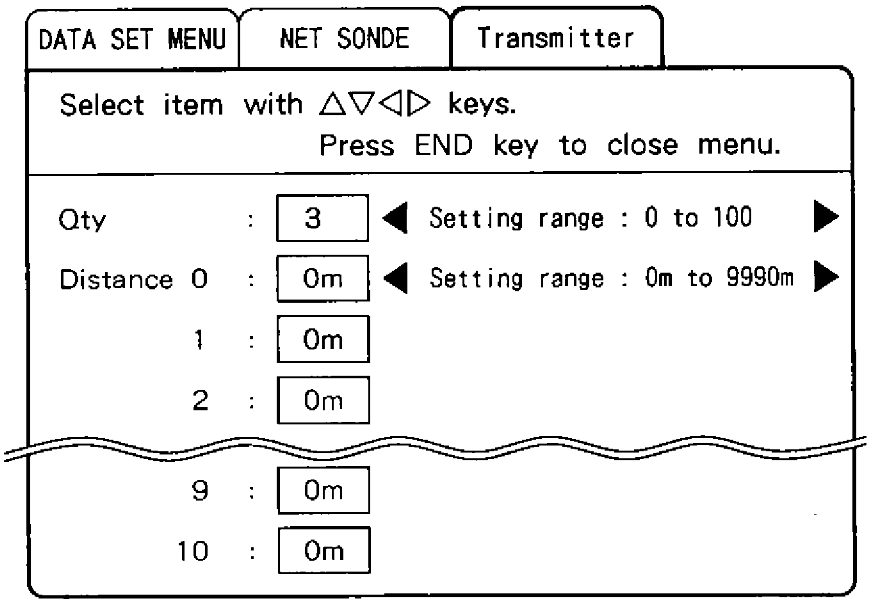

5.11. Interface Unit Adjustment

E/S LEVEL control on the display unit allows adjustment of the picture color on the screen.

However, if adjustment of the E/S level control can not get the best coloration, perform fine adjustment with the preset potentiometers on the I/O board in the interface unit as follows.

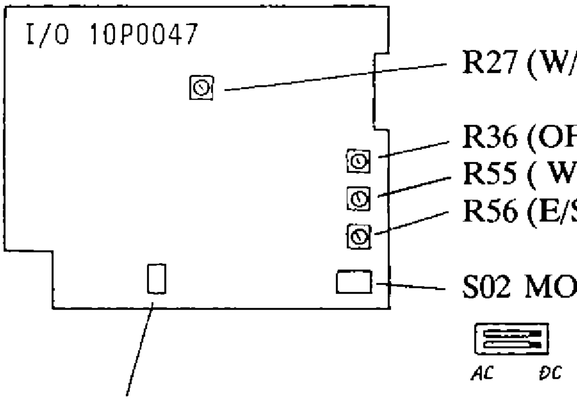

R27 (W/L INHIBIT TIME)

R36 (OFFSET)
R55 (W/L GAIN)
R56 (E/S GAIN)

S02 MODE: Selects the signal mode (AC or DC) according to the combined echo sounder.

S01 FNZ MARKER: The FNZ marker is plotted on the echo sounder picture. Factory setting is in the "ON" position.

5.11.1. Adjustment of signal level (R36, R56)

Prior to adjustment, verify that the output level of E/S interface (VI-1100A) satisfies the following ratings.

1) For AC INPUT

2) For DC INPUT

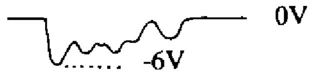

If not, adjust the potentiometers in the VI-1100A referring to the installation manual for FCV series. S02 is usually set to the "AC" position at the factory.

-- Procedure --

Turn the E/S gain and E/S offset potentiometers (R56 and R36) so that the color gradation of E/S picture on the screen appears similar to the intensity gradation of the combined E/S echogram.

Case(A) The E/S picture on the CSH-21/22 series is comparatively higher in sensitivity than that of the paper echogram.

Turn the E/S offset potentiometer so that weak signals painted in blue or light blue is displayed in deep blue.

Case(B) The E/S picture on the CSH-21/22 series is comparatively lower in sensitivity than that of the paper echogram.

Turn the E/S gain potentiometer CW until a picture of even quality is obtained.

5.11.2. Adjustment of white line inhibit time (R27)

In case digital depth data is not combined with the CS-120A, the white line signal from the echo sounder is used for depth information.

The potentiometer R27 cancels the white line pulse for about 10 ms after transmission to avoid false depth indication caused by unwanted noise in short ranges.

No readjustment of potentiometer R27 is required as long as the CSH-21/22series indicates the correct depth, but if not, turn it CW about 90 degrees.

5.11.3. Adjustment of white line output level (R55)

Improper setting of potentiometer R55 causes the seabed line to be painted in deep blue due to the white line pulse. Adjust it so that the seabed is painted in reddish brown.

5.12. DIP Switch Setting

Set DIP switch on display unit, referring to the table shown below.

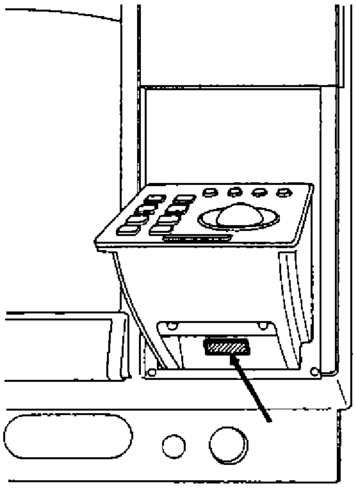

<table>
<tr><th>Item</th><th>SW No.</th><th colspan="6">Setting</th></tr>
<tr><td>ID Code for Interlock Function</td><td>1
2
3</td><td colspan="6">Set ID code for interlock operation of CSH-21/22 series sonar. Any code is acceptable unless it is used in other interlocked sonars.</td></tr>
<tr><td rowspan="3">Unit Code</td><td>4</td><td>ON</td><td rowspan="3">CSH-21/22</td><td>OFF</td><td rowspan="3">CSH-21K</td><td>ON</td><td rowspan="3">CSH-21F/ 22F</td></tr>
<tr><td>5</td><td>ON</td><td>ON</td><td>ON</td></tr>
<tr><td>6</td><td>OFF</td><td>OFF</td><td>ON</td></tr>
<tr><td>EEPROM Check</td><td>7</td><td>ON</td><td colspan="2">Check OFF</td><td>OFF</td><td colspan="2">Check ON</td></tr>
<tr><td>Stand Alone</td><td>8</td><td colspan="6">For factory use. Set to ON always.</td></tr>
</table>

5.13. Self Test

The CSH-21/22 series sonar has built-in self tests which check the sonar for proper operation. Execute the tests after all installation jobs are completed.

5.13.1.Turning on/off Self Test

1. Turn on the unit while pressing the MENU key.
   All LEDs on control panel will light. Keep the MENU key pressed until they go off.

2. The INIT SET/TEST menu is displayed. Select an appropriate self-test by operating the ↑ ↓ keys.

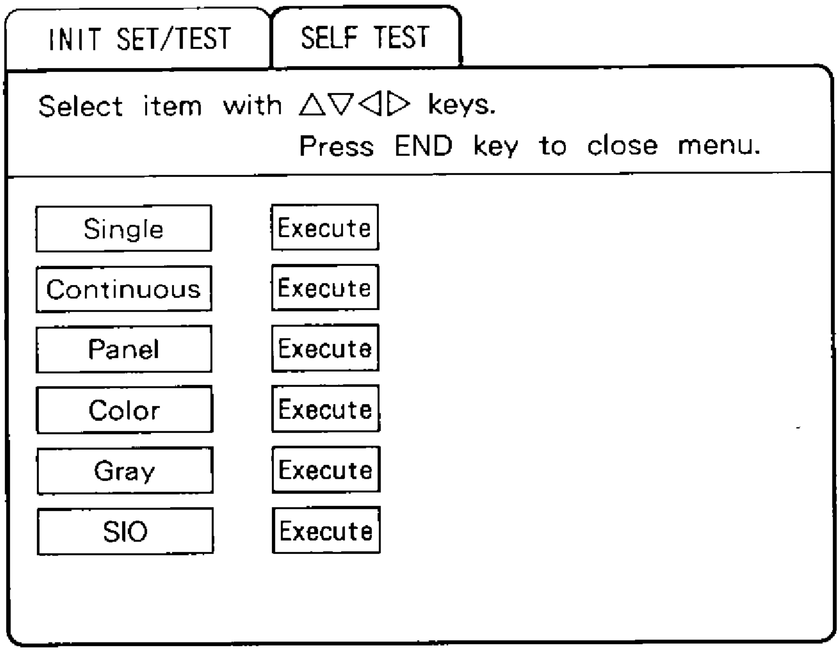

3. Press the MENU key to execute the self-test.

4. To exit from the INIT SET/TEST menu, turn off and then on the unit.

5.13.2. Interpreting Display

Single Test: This test checks the display and receiver units for proper operation one time, after which normal operation is restored. After the test is completed the results are indicated either as OK (normal operation) or NG (malfunction), to the right of the device checked.

```
                START UP TEST

DCON     105-0350-2xx     105-0351-1xx
         ROM   =  OK
         RAM   =  OK
         DPRAM =  OK
         P. W  =  OK

DRAW     105-0300-2xx     105-0445-1xx
         ROM   =  OK
         RAM   =  OK

DUAL     105-0381-2xx     105-0381-1xx
         ROM   =  OK
         RAM   =  OK

ES       105-0382-1xx
         ROM   =  OK
         RAM   =  OK

SLICE    105-0353-1xx
         ROM   =  OK
         RAM   =  OK

PSIO     105-0352-1xx
         ROM   =  OK
         RAM   =  OK

PIF      105-0415-1xx
         ROM   =  OK
         RAM   =  OK
----------------------------------------------------
RX1      105-0226-001     ROM  =  OK    RAM  =  OK
1X1                       ROM  =  OK    RAM  =  OK

RX2                       ROM  =  OK    RAM  =  OK
1X2                       ROM  =  OK    RAM  =  OK
```

Continuous Test: This is a continuous check of display unit.

```
                CONTI TEST

DCON
         ROM       =  OK
         RAM       =  OK
         DROM      =  OK
         DPRAM     =  OK
         P. W      =  OK
         EEPROM    =  OK
         REACT     =  OK
DRAW
         ROM       =  OK
         RAM       =  OK
         VRAM      =  OK
         DPRAM     =  OK
         CLT       =  OK
DUAL
         ROM       =  OK
         RAM       =  OK
         DPRAM     =  OK
ES
         ROM       =  OK
         RAM       =  OK
         DPRAM     =  OK
SLICE
         ROM       =  OK
         RAM       =  OK
         DPRAM     =  OK
PSIO
         ROM       =  OK
         RAM       =  OK
PIF
         ROM       =  OK
         RAM       =  OK
         MEMCARD   =  OK
```

Panel Test: This test checks the controls on the front panel and remote control box for proper operation. Operate each control and check that the figure corresponding to the operated control changes.

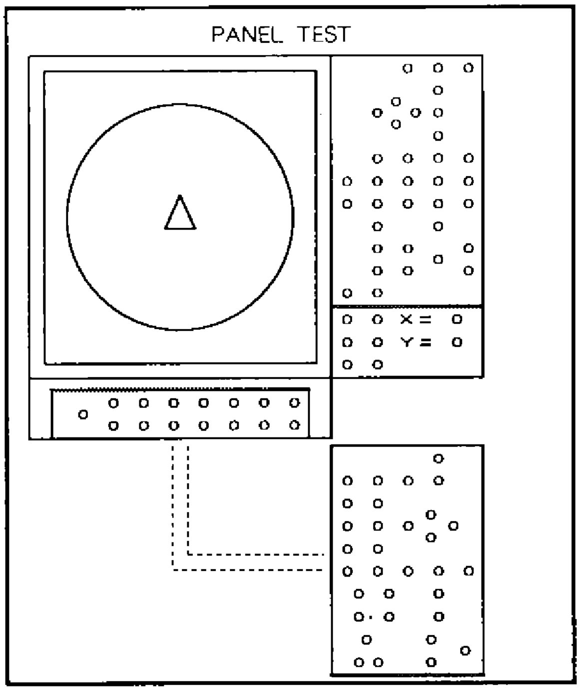

Color Test: This test checks for proper display of all colors.

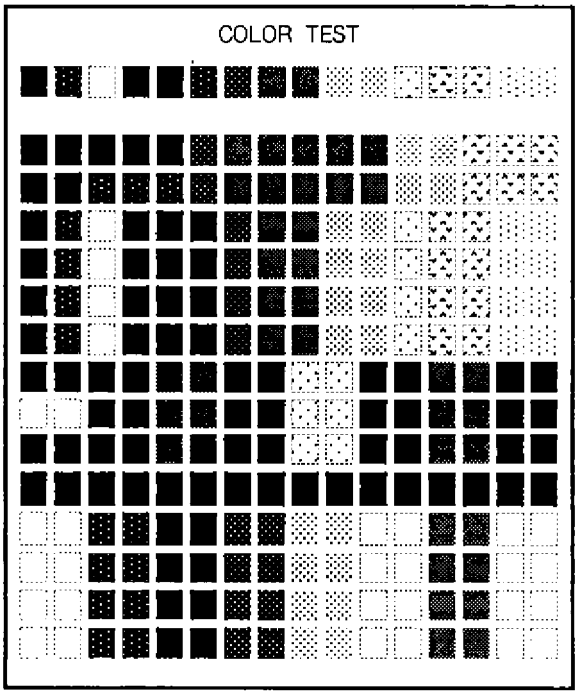

Gray Test: The gray test checks for proper display of monochrome letters and markers. Concentric rings and monochrome test bars are displayed.

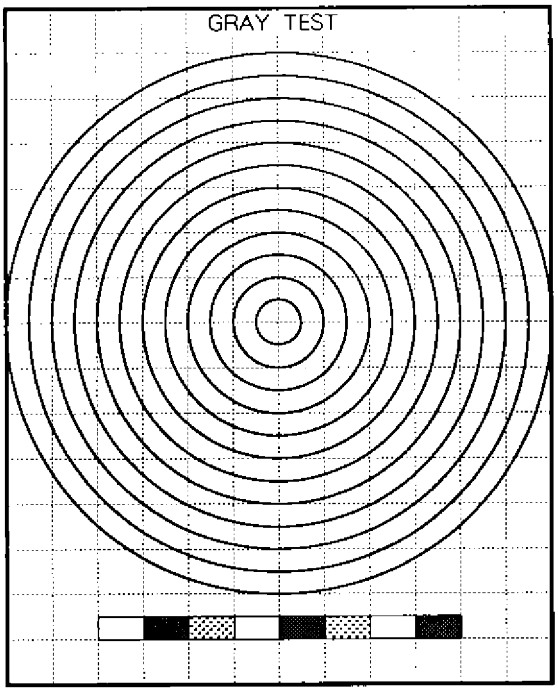

SIO Test: This test checks the SIO(Serial Input Output) port for communication with receiver and other display unit. It is usually executed at factory only since a special test connector is required.

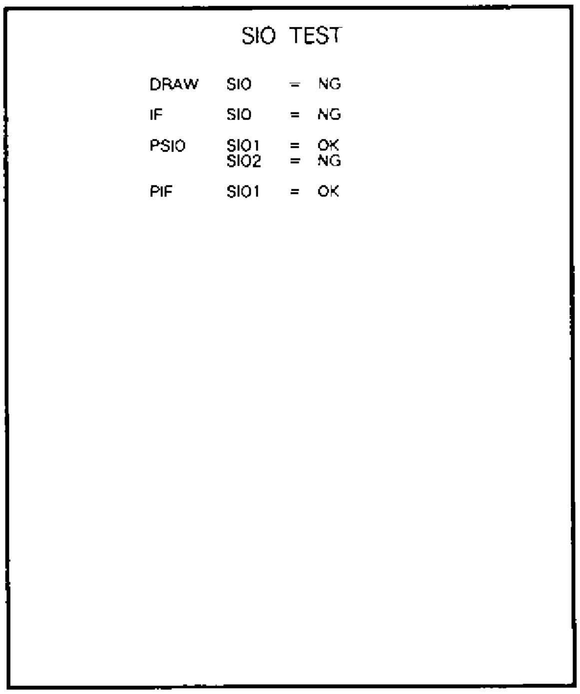

APPENDIX 1. STANDARD SETTING OF DIP SWITCHES

The following shows the standard settings of the DIP switches on each printed circuit board. When replacing a board, make sure that the settings are correct.

Display Unit

<table>
<tr><th>Board</th><th>DIP Switch Setting</th></tr>
<tr><td>Main Panel
PND Board
(10P6714)</td><td>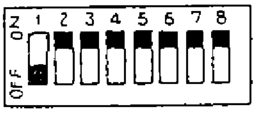
Set #2 to ON for 14 inch display and OFF for 20 inch display.
Set #8 to OFF in case of sub-display.</td></tr>
<tr><td>CONE Board
(10P6711)</td><td>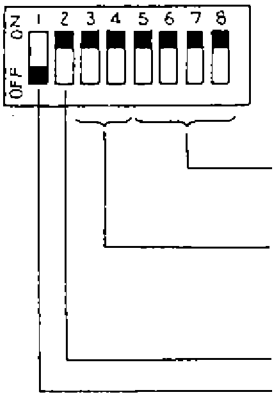
Unused
E/S 2 Signal
<table><tr><th></th><th>3</th><th>4</th></tr><tr><td>AC</td><td>OFF</td><td>ON</td></tr><tr><td>DC</td><td>ON</td><td>OFF</td></tr></table>
Sonar 2: OFF; connected, ON;unconnected
Sonar 1: OFF; connected, ON;unconnected
NOTE: When the receiver unit is connected to sonar 1 port, be sure that switch #2 is set to ON. Otherwise the sonar can not be turned off. Setting the switch to ON is equivalent to activating the upper limit switch of the hull unit.</td></tr>
</table>

Transmitter Unit

<table>
<tr><th>Board</th><th>DIP Switch Setting</th></tr>
<tr><td>TX CPU
Board
(10P6150)</td><td>

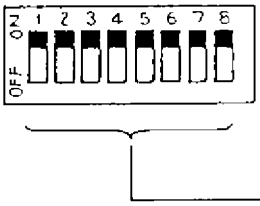

Equipment sub-type code

<table>
<tr><th>Sub-type</th><th>1</th><th>2</th><th>3</th><th>4</th><th>5</th><th>6</th><th>7</th><th>8</th></tr>
<tr><td>CSH-21/22-1 (24)</td><td>OFF</td><td>OFF</td><td>OFF</td><td>ON</td><td>OFF</td><td>ON</td><td>ON</td><td>OFF</td></tr>
<tr><td>CSH-21/22-2 (28)</td><td>OFF</td><td>ON</td><td>ON</td><td>OFF</td><td>ON</td><td>ON</td><td>ON</td><td>OFF</td></tr>
<tr><td>CSH-21/22-3 (32)</td><td>OFF</td><td>OFF</td><td>OFF</td><td>ON</td><td>OFF</td><td>OFF</td><td>OFF</td><td>ON</td></tr>
<tr><td>CSH-21/22-4 (40L)</td><td>OFF</td><td>OFF</td><td>OFF</td><td>ON</td><td>ON</td><td>OFF</td><td>OFF</td><td>ON</td></tr>
<tr><td>CSH-21/22-5 (40H)</td><td>OFF</td><td>OFF</td><td>OFF</td><td>ON</td><td>OFF</td><td>ON</td><td>OFF</td><td>ON</td></tr>
<tr><td>CSH-21/22-6 (45)</td><td>OFF</td><td>OFF</td><td>OFF</td><td>OFF</td><td>ON</td><td>ON</td><td>OFF</td><td>ON</td></tr>
</table>

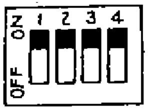

(Should be kept in "ON" position)

</td></tr>
</table>

Receiver Unit

Board	DIP Switch Setting

RCPU Board (10P6308)

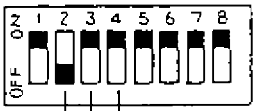

Preamplifier TVG curve preset

3	4	Pre-TVG	
ON	ON	10 LOG	Factory setting
ON	OFF	5 LOG	

Receiver gain compensation with tilt angle

2		
ON	No	
OFF	Yes	Factory setting

ITP Board (10P6126)

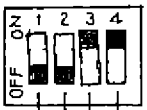

- 4: ON
- 3: ON
- 2: OFF
- 1: Unused (OFF)

Factory setting

RCON Board (10P6129)

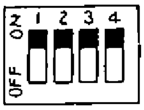

Equipment sub-type setting

Sub-type	1	2	3	3
CSH-21/22-1 (24)	ON	ON	ON	ON
CSH-21/22-2 (28)	ON	ON	ON	OFF
CSH-21/22-3 (32)	ON	ON	OFF	ON
CSH-21/22-4 (40L)	ON	ON	OFF	OFF
CSH-21/22-5 (40H)	ON	OFF	ON	ON
CSH-21/22-6 (45)	ON	OFF	ON	OFF